Optical Specification

Model	OPT-CH10-65C-F22
Optical Configuration	Telecentric
Working Distance (mm)	65±2
Magnification	1.0X
Sensor ∅(mm)	11.0(2/3")
Aperture	F22
Telecentricity	0.10°
NA	0.02268
Distortion	<0.1%
Depth of Field (mm)	1.82
Object Resolution (μm)	14.79
Resolution (μm)	11.10
Image MTF30(lp/mm)	45
Field of View ∅(mm)	11.00
O/I Distance (mm)	177.5
Mount	C-Mount
Weight (kg)	0.12
Size (mm)	∅29.0×94.93
Filter Thread (mm)	M27×0.5-6H
Working temperature	-20°C～+60°C

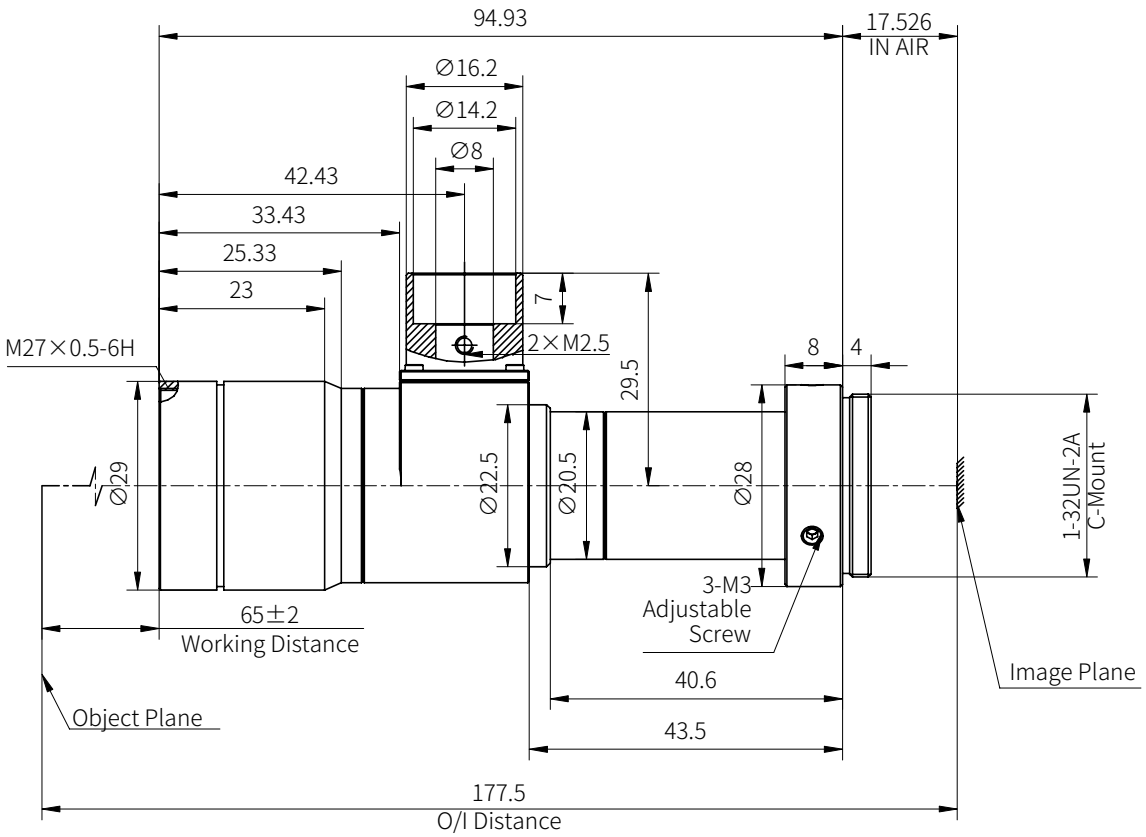

[1]Resolution:The resolution is the image resolution.
[2]WD:The distance between the front end of the mechanism and the object.
[3]DOF evaluation formula for telecentric lenses:

$$\text{DOF(mm)}=\frac{F\#\times P\times k}{\beta\times\beta}$$

F#:The real F-number of a lens when used
P:Sensor pixel size(5.5 μm used here)
β:Lens magnification
k:The parameter based on application (measurement, k=0.015;defect detection, k=0.008;0.015 used here)
At the borders of DOF,the image can still be used for measurement. But only half of the nominal DOF should be used to get a sharp image.

View Angle		Item	Signature	Date	OPT Machine Vision	OPT Machine Vision Tech Co., Ltd.			
		Drawing							
Standard Difference	IT14	Design			All Rights Reserved				
		Check							
Drawing Code		Scale			Name	OPT-CH10-65C-F22			
		Paper Size	A4		Unit	mm	Page 1 / 1	Version	1.0