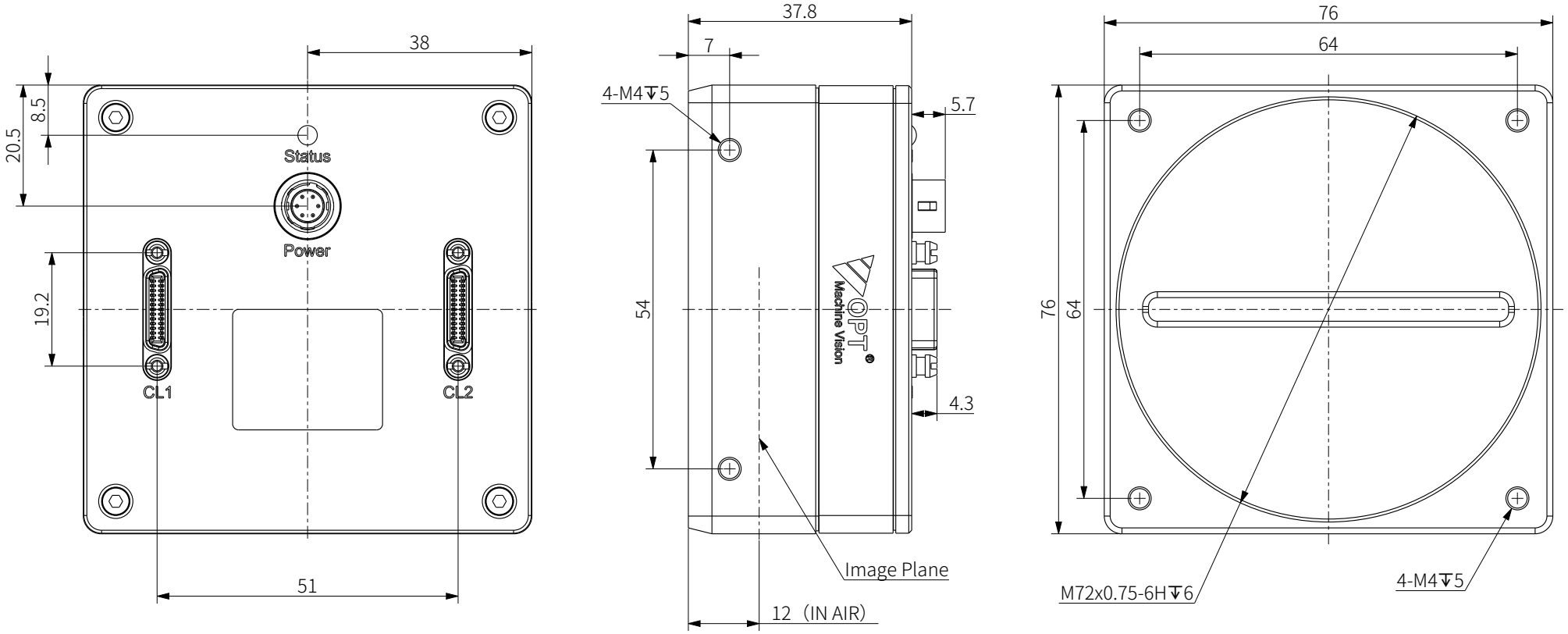

View Angle		Item	Signature	Date	OPT Machine Vision Tech Co., Ltd.				
		Drawing							
Standard Difference	IT14	Design			All Rights Reserved				
		Check							
Drawing Code		Scale	1:1		Name	OPT-CL1-M8-L3-02			
		Paper Size	A4		Unit	mm	Page 1 / 1	Version	1.0