Optical Specification

Model	OPT-HP10-110-LQLTC
Optical Configuration	Telecentric
Working Distance (at 0 dpt) (mm)	110±2
Magnification	1.0X
Sensor Φ(mm)	18.4(1.1")
Aperture	F7.0 ~ F62
Telecentricity	0.10°
NA	0.07124 ~ 0.008
Distortion	<0.1%
Depth of Field (mm)	0.58
Resolution (at 0 dpt) (μm)	3.85
Image MTF30 (at 0 dpt) (lp/mm)	130
Field of View Φ(mm)	18.40
Mount	C-Mount
Size (mm)	Φ47×146.84
Weight (kg)	0.48
Filter Thread (mm)	M42×0.5-6H
O/I Distance without current (mm)	275.4
Connector type	Hirose HR10G-7R-6SB(73)
Focus tunable lens specifications	EL-12-30-TC-VIS
Focal power at 0 mA (25°C, typical) (dpt)	-1 ～ +2
Focal power range (25°C, ±250 mA)(dpt)	-6～+10
Wavefront error at 532 nm (vertical/horizontal) (λRMS)	0.15 / 0.23
Working Temperature	-0°C～+65°C
Storage temperature	-40°C～+85°C
Temperature compensation	Yes
Wavelength range (nm)	400～1000

Distance data/mm	Normal focus distance(Min)	Normal focus distance(Max)	Clear focus distance(Min)	Clear focus distance(Max)
	80	131	104.8	115.2
Optical Power/dpt	9.684	-6.843	2.289	-1.68

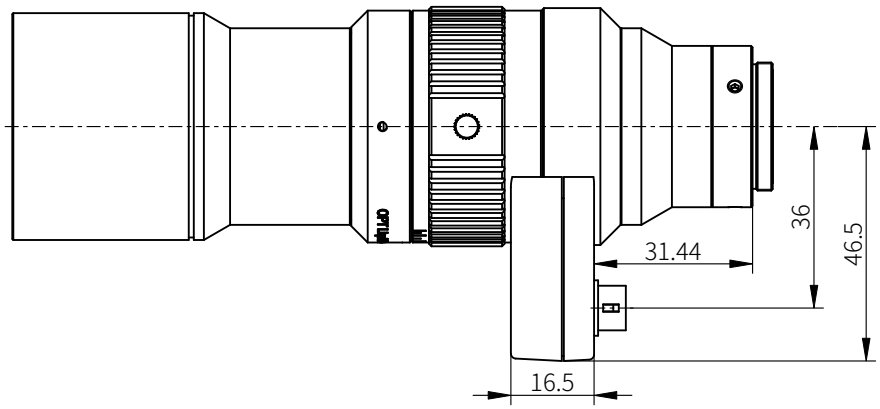

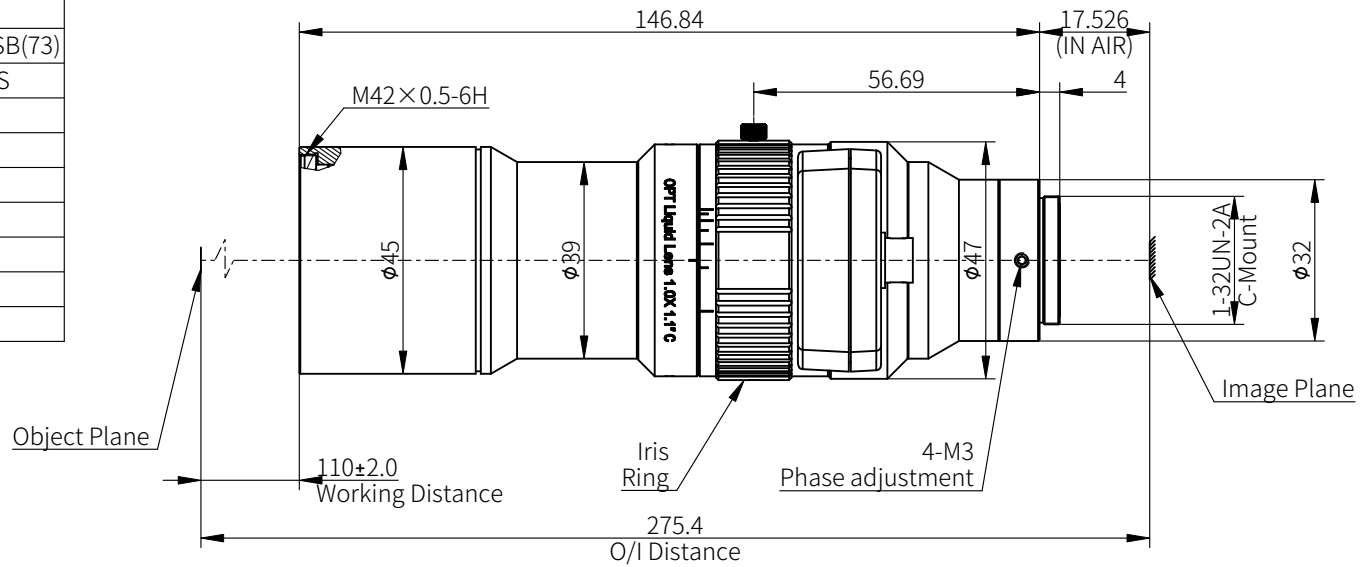

[1]Resolution:The resolution is the image resolution.
[2]DOF evaluation formula for telecentric lenses:

$$DOF(mm)=\frac{F\#\times P\times k}{\beta\times\beta}$$

F#:The real F-number of a lens when used
P:Sensor pixel size (5.5 μm used here)
β:Lens magnification
k:The parameter based on application (measurement, k=0.015; defect detection, k=0.008; 0.015 used here)
At the borders of DOF,the image can still be used for measurement. But only half of the nominal DOF should be used to get a sharp image.

View Angle		Item	Signature	Date	OPT Machine Vision	OPT Machine Vision Tech Co., Ltd.		
		Drawing						
Standard Difference	IT14	Design			All Rights Reserved			
		Check						
Drawing Code		Scale	2:3		Name	OPT-HP10-110-LQLTC		
		Paper Size	A4		Unit	mm	Page 1 / 1	Version V1.0