Model	Color	Voltage	Power
OPT-IRI5060-IR850	Infrared (850nm)	24V	2.8W
OPT-IRI5060-IR940	Infrared (940nm)	24V	2.5W

JST SMR-02V-B, 2 Pin or Compactible Connector

Pin	Polarity
1	+
2	-

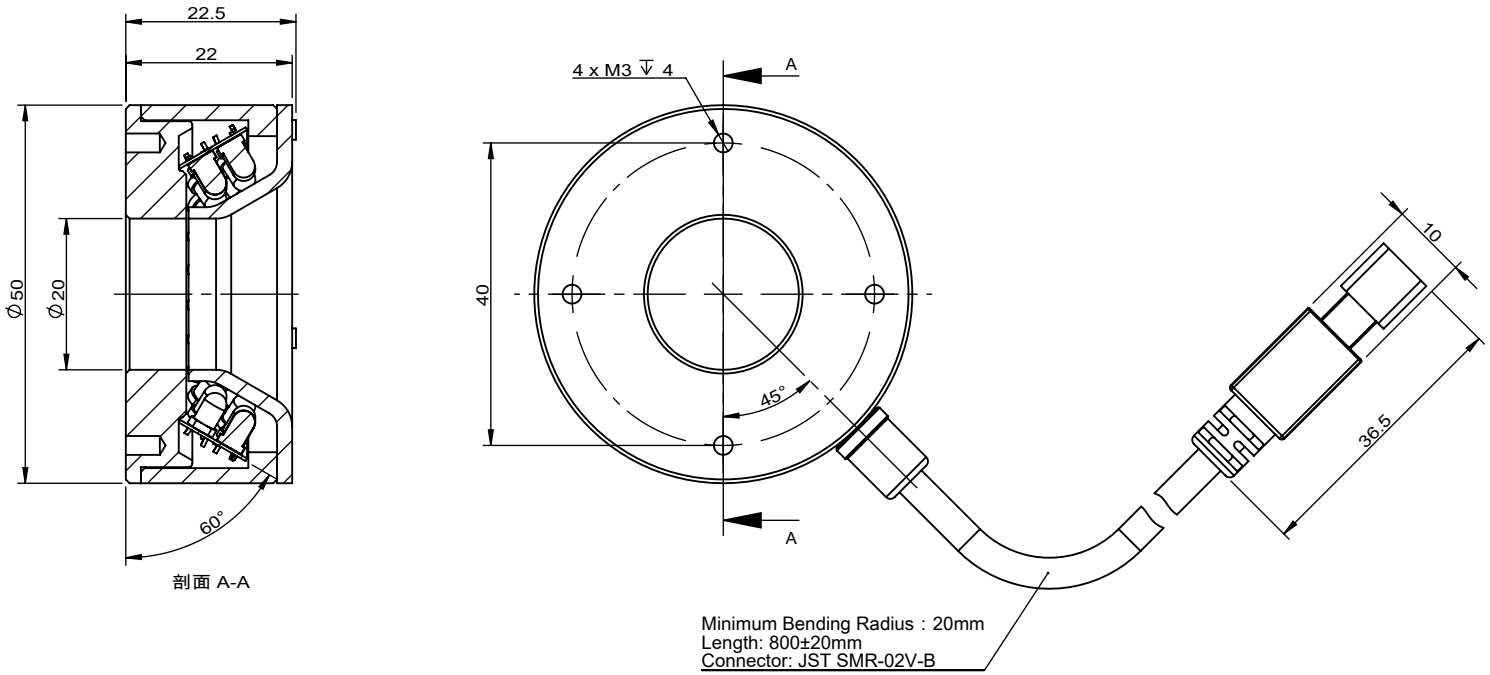

View Angle		Standard Difference	IT14
Paper Size	A 4	Scale	1:1
Drawing Date	2018/08/28	Revised Date	2023/08/29

Remark

Advised Controller:
OPT-DPA2024E
OPT-AP1024F

OPT® Machine Vision OPT MACHINE VISION

OPT-IRI5060-IR

Copyright © 2011 by OPT
All Rights Reserved

Drawing Code	KFBZ20230829KF3805

Version	V2.0U