Model	Color	Voltage	Power
OPT-IRI7045-IR850	Infrared (850nm)	24V	5.1W
OPT-IRI7045-IR940	Infrared (940nm)	24V	4.1W

JST SMR-02V-B, 2 Pin or Compactible Connector

Pin	Polarity
1	+
2	-

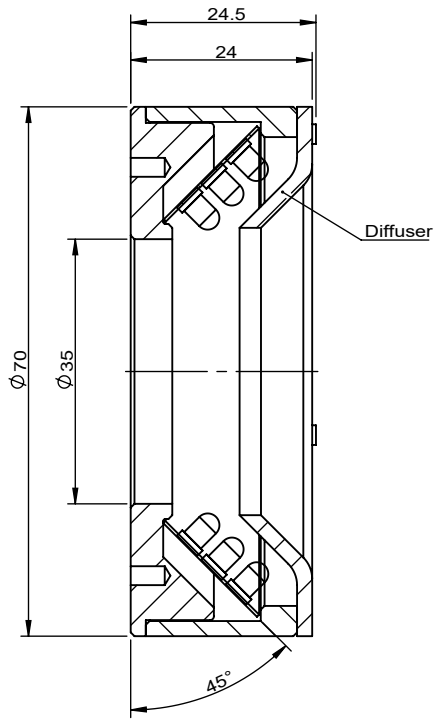

Sectional View
A-A

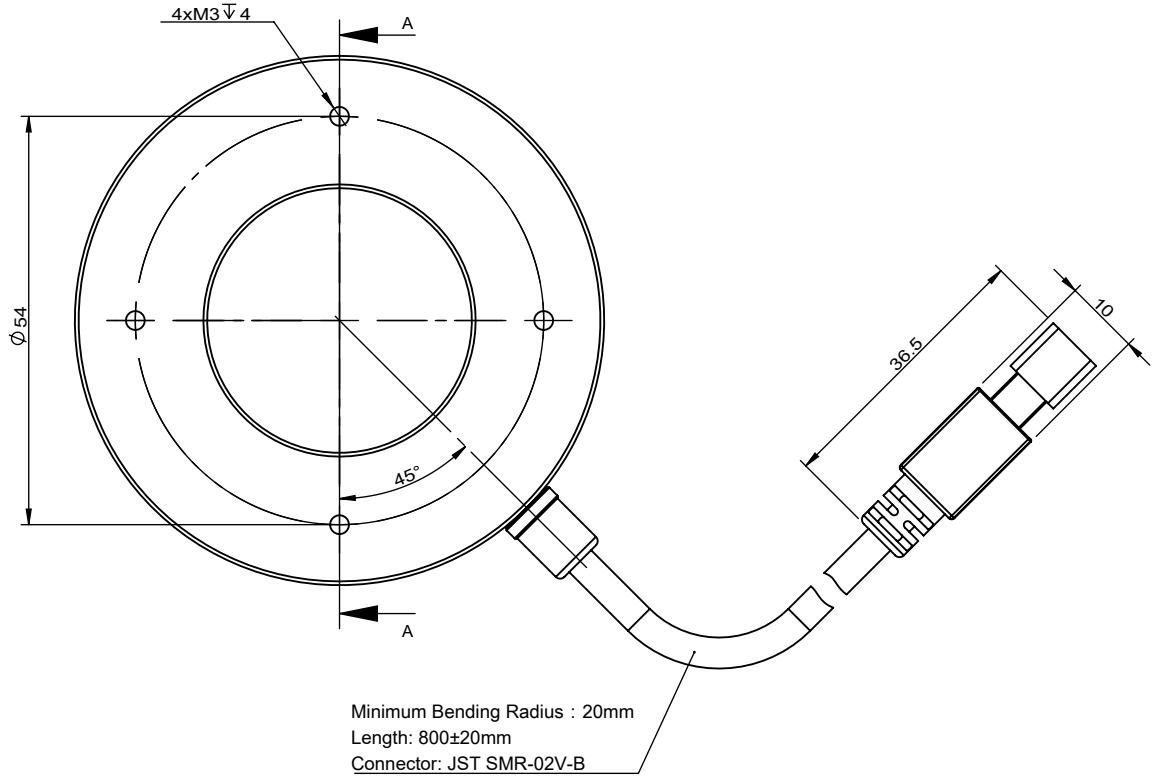

Copyright © 2011 by OPT
All Rights Reserved

View Angle		Standard Difference	IT14	Remark	OPT® Machine Vision OPT MACHINE VISION
Paper Size	A 4	Scale	1:1	Advised Controller: OPT-DPA2024E OPT-AP1024F	OPT-IRI7045-IR
Drawing Code	KFBZ20230830KF3802	Drawing Date	2018/08/28	Revised Date	2023/08/30	Version	V2.0U