Model	Color	Voltage	Power
OPT-LSE104N-W	Withe	24V	10.8W
OPT-LSE104N-G	Green	24V	10.8W
OPT-LSE104N-B	Blue	24V	10.8W

JST SMR-02V-B, 2 Pin
or Compactible Connector

Pin	Polarity
1	+
2	-

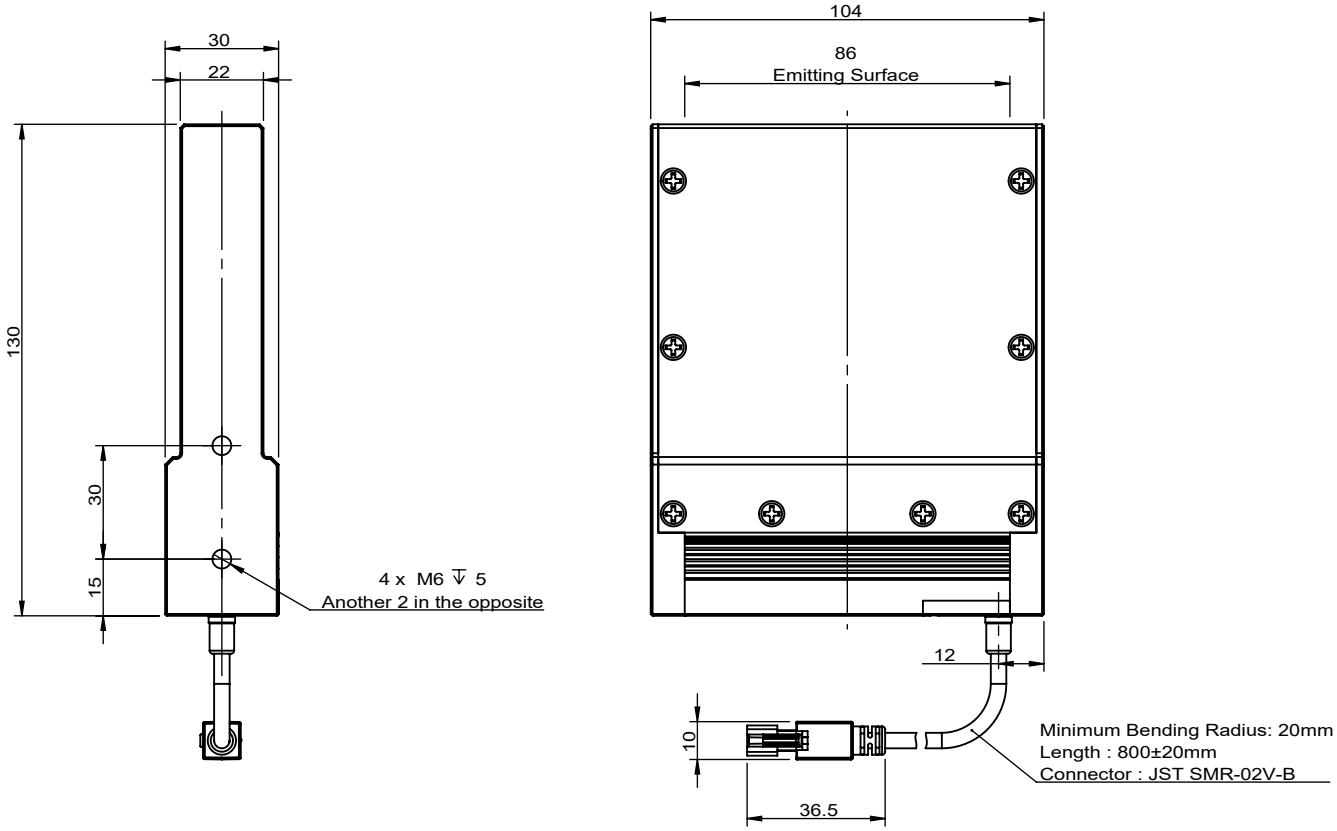

View Angle		Standard Difference	IT14	Remark	OPT® Machine Vision OPT MACHINE VISION
				Advised Controller: OPT-DPA2024E OPT-AP1024F	
Paper Size	A 4	Scale	1:2		OPT-LSE104N-W
Drawing Code	KFBZ20230609KF3801	Drawing Date	2023/06/09	Revised Date	2023/06/09
					Version V1.0

Copyright © 2011 by OPT
All Rights Reserved