Model	Color	Voltage	Power
OPT-LSNL230-W	White	24V	36W
OPT-LSNL230-G	Green	24V	36W
OPT-LSNL230-B	Blue	24V	36W

JST SMR-02V-B, 2 Pin
or Compactible Connector

Pin	Polarity
1	+
2	-

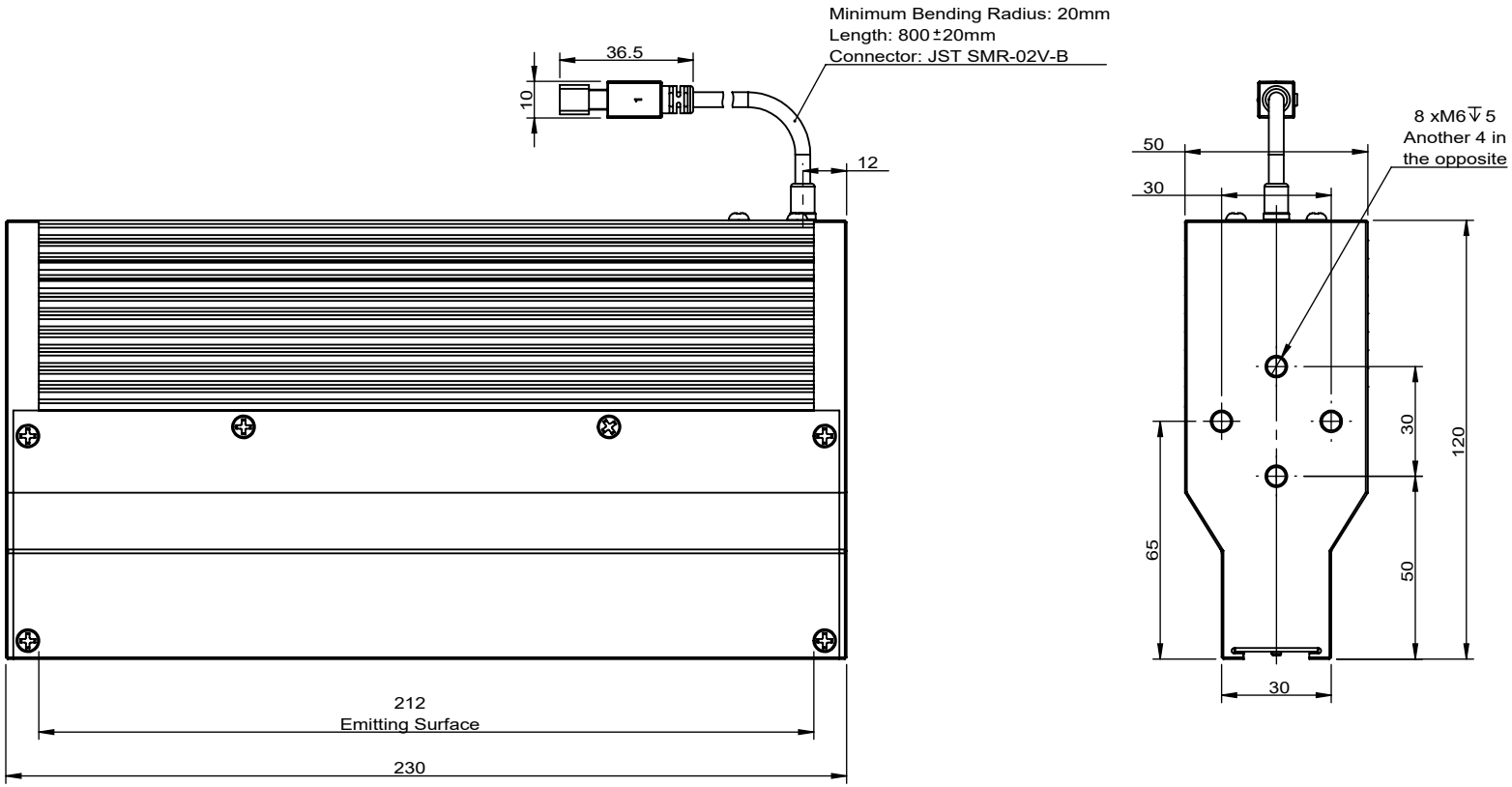

View Angle		Standard Difference	IT14
Paper Size	A 4	Scale	1:2
Drawing Date	2020/8/18	Revised Date	2021/4/5

Remark

Advised Controller:
OPT-DPA2024E

OPT® Machine Vision OPT MACHINE VISION

OPT-LSNL230-W

Version V1.0U

Copyright © 2011 by OPT
All Rights Reserved

Drawing Code KFBZ20210402KF1703