Model	Color	Voltage	Power
OPT-LSNL272-W	White	24V	43.2W
OPT-LSNL272-G	Green	24V	43.2W
OPT-LSNL272-B	Blue	24V	43.2W

JST SMR-02V-B, 2 Pin
or Compatible Connector

Pin	Polarity
1	+
2	-

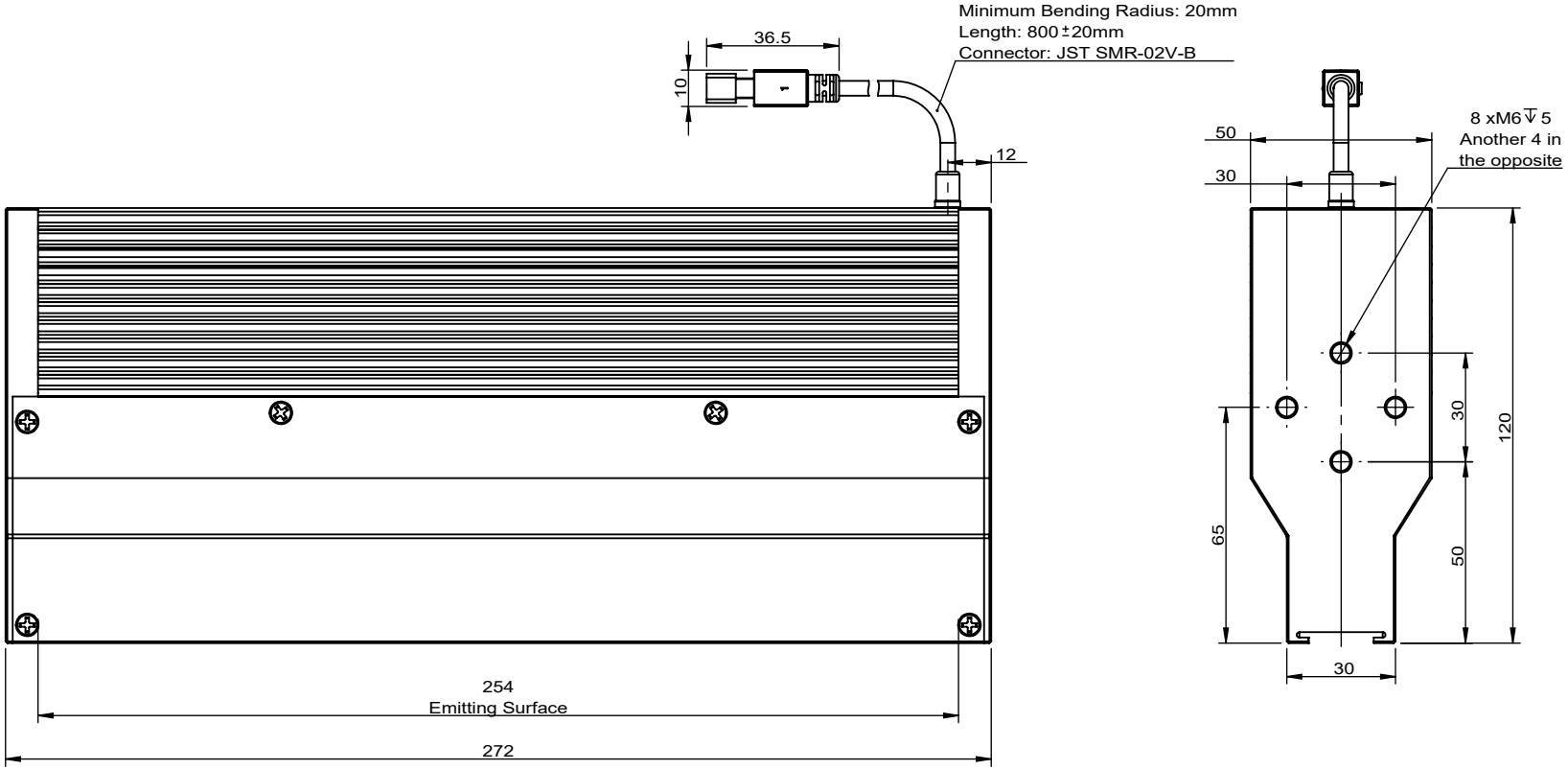

View Angle		Standard Difference	IT14
Paper Size	A 4	Scale	1:2
Drawing Date	2020/8/18	Revised Date	2021/4/5

Remark

Advised Controller:
OPT-DPA2024E

OPT® Machine Vision OPT MACHINE VISION

OPT-LSNL272-W

Copyright © 2011 by OPT
All Rights Reserved

Drawing Code	KFBZ20210402KF1708

Version	V1.0