Model	Color	Voltage	Power
OPT-LSNS356-W	White	24V	33.6W
OPT-LSNS356-G	Green	24V	33.6W
OPT-LSNS356-B	Blue	24V	33.6W

JST SMR-02V-B, 2 Pin
or Compactible Connector

Pin	Polarity
1	+
2	-

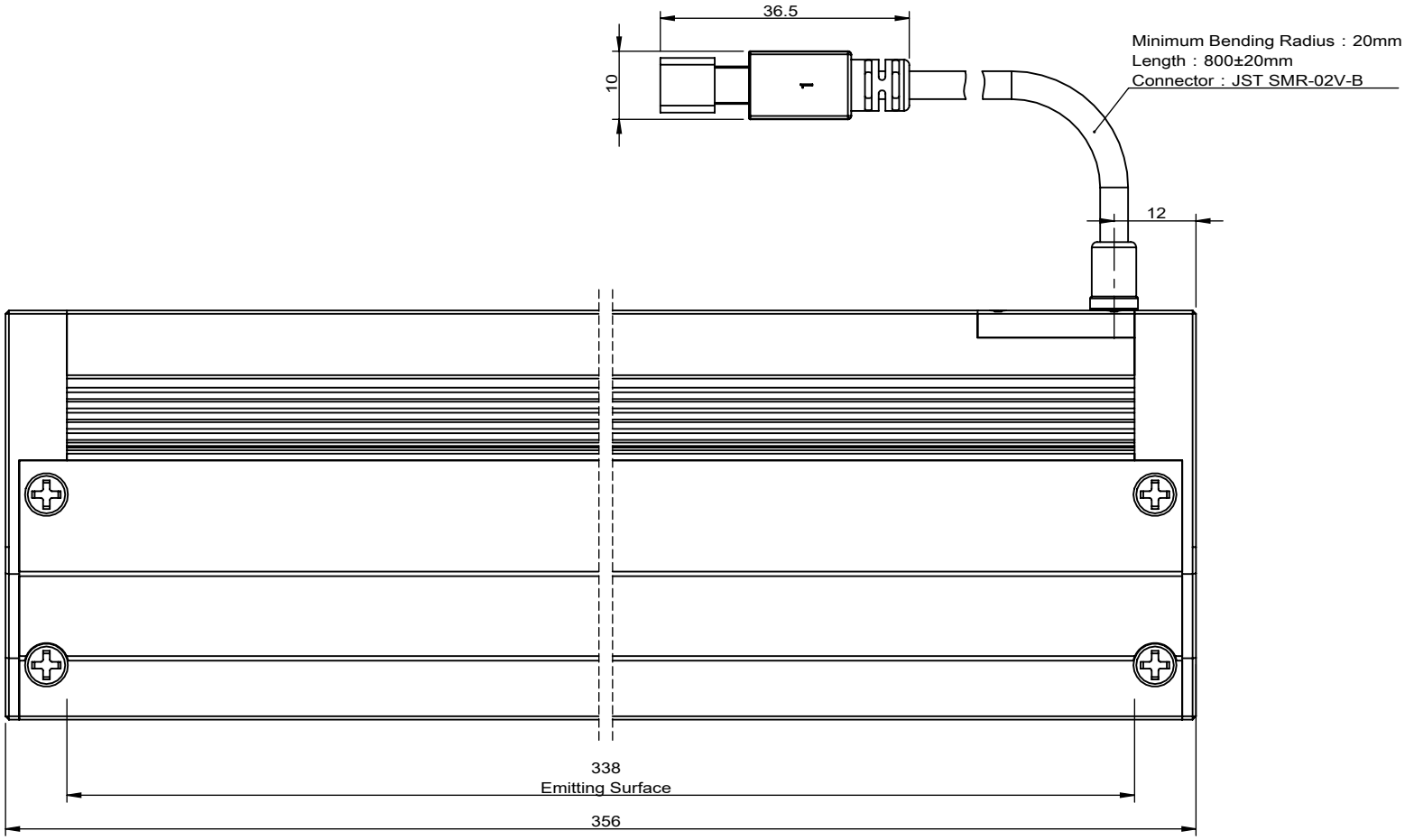

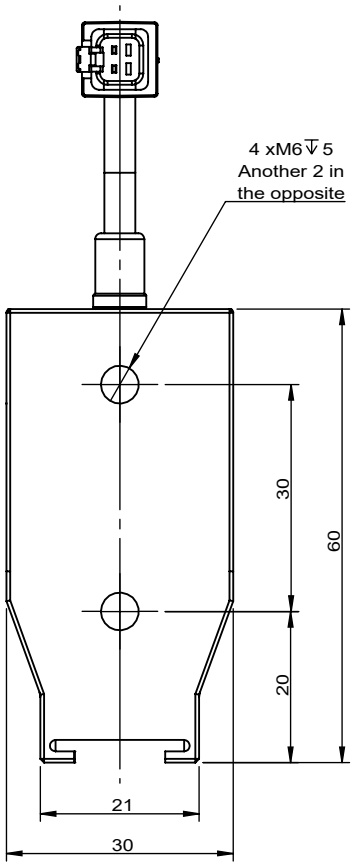

View Angle		Standard Difference	IT14	Remark	OPT® Machine Vision OPT MACHINE VISION
Paper Size	A 4	Scale	1:1	Advised Controller: OPT-DPA2024E	OPT-LSNS356-W
Drawing Date	2021/2/3	Revised Date	2021/4/2		Version V1.0

Copyright © 2011 by OPT
All Rights Reserved

Drawing Code KFBZ20210401KF1606