Model	Color	Current	Power
OPT-LSS524-W	White	8.4A	201.6W
OPT-LSS524-G	Green	8.4A	201.6W
OPT-LSS524-B	Blue	8.4A	201.6W

WS20J6TQ,6 Pin or Compactible Connector

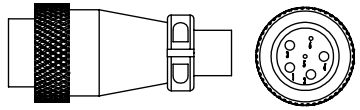

Pin	Pin Definition
1	Fan +
2	Fan -
3	Light -
4	Light +
5	NC*
6	NC*

* DO NOT CONNECT ANY COMPONENT

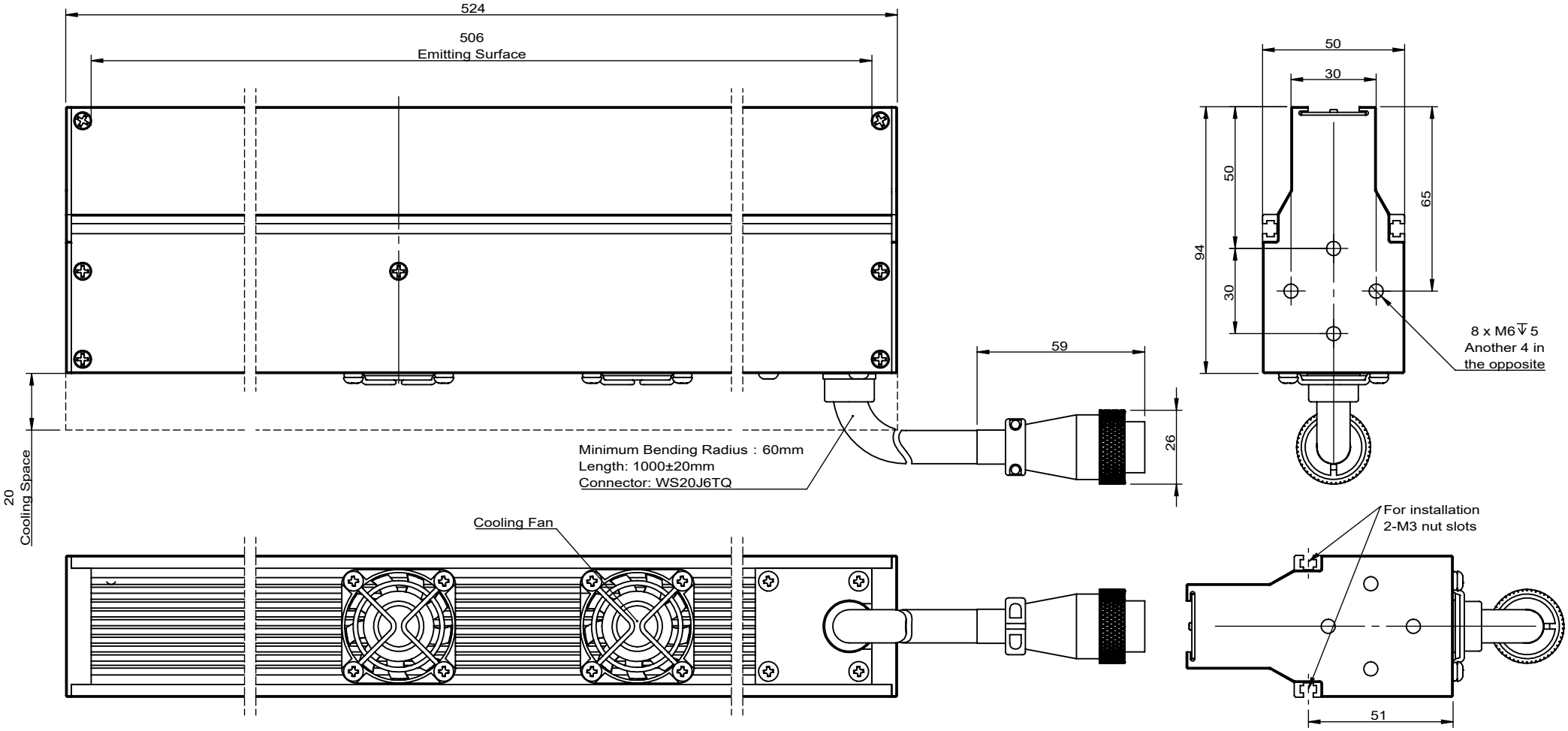

View Angle		Standard Difference	IT14	Remark
Paper Size	A 4	Scale	1:2	Advised Controller: OPT-DPA10024 OPT-DPA20024
Drawing Date	2021-06-23	Revised Date	2024-02-18	

OPT® Machine Vision OPT MACHINE VISION

OPT-LSS524-W

Copyright © 2011 by OPT
All Rights Reserved

Drawing Code	KFBZ20240218KF3601	Version	V3.1U