Model	Color	Current	Power	Channel
OPT-LSS650-W	White	10.5A	252W	2
OPT-LSS650-B	Blue	10.5A	252W	2
OPT-LSS650-G	Green	10.5A	252W	2

ZQ GX16M-6B, M16x1.0, 6 Pin
or Compatible Connector

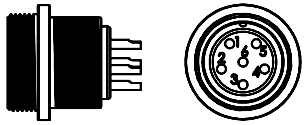

Pin	Pin Definition
1	Light +
2	Light -
3	Fan +
4	Fan -
5	NC*
6	NC*

* DO NOT CONNECT ANY COMPONENT

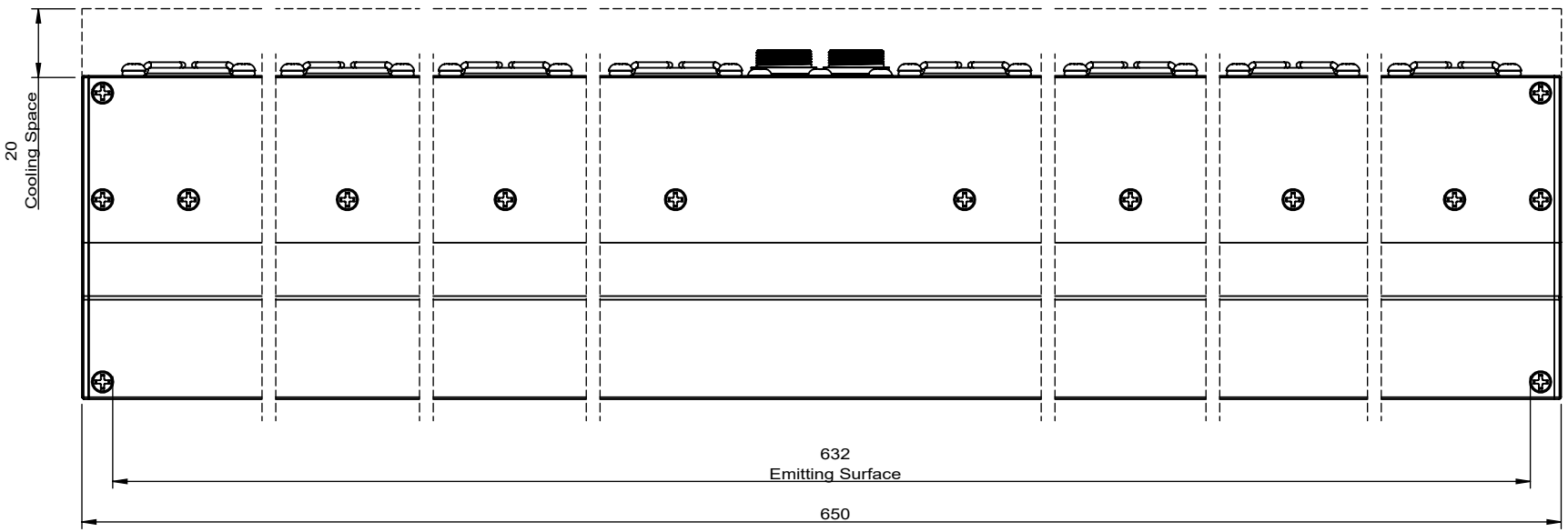

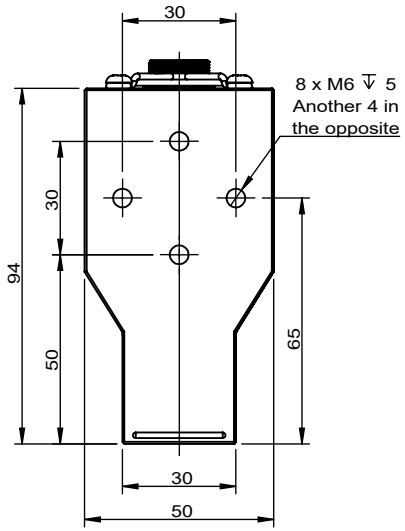

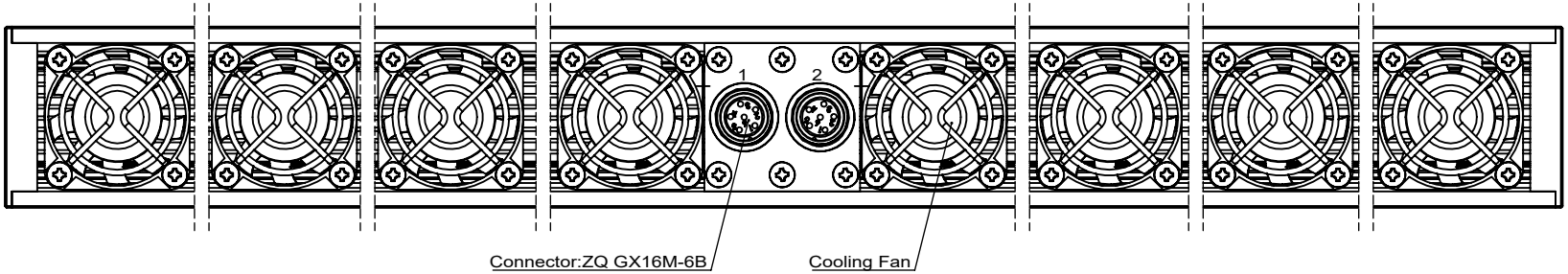

View Angle		Standard Difference	IT14	Remark	OPT® Machine Vision OPT MACHINE VISION
Paper Size	A 4	Scale	1:2	1.It needs to be equipped with OPT-DGYX1M-6P-S-6A cable. 2.Advised Controller: OPT-DPA6024	OPT-LSS650-W
Drawing Code	KFBZ20200606KF1826	Drawing Date	2020/6/6	Revised Date	2020/6/6	Version	V3.0U

Copyright © 2011 by OPT
All Rights Reserved