Model	Color	Current	Power
OPT-LSSX104-W	White	1.4A	33.6W
OPT-LSSX104-G	Green	1.4A	33.6W
OPT-LSSX104-B	Blue	1.4A	33.6W

ZQ GX16M-6A, M16x1.0, 6 Pin
or Compactible Connector

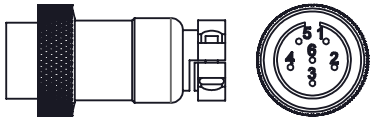

Pin	Pin Definition
1	Light +
2	Light -
3	Fan +
4	Fan -
5	NC*
6	NC*

* DO NOT CONNECT ANY COMPONENT

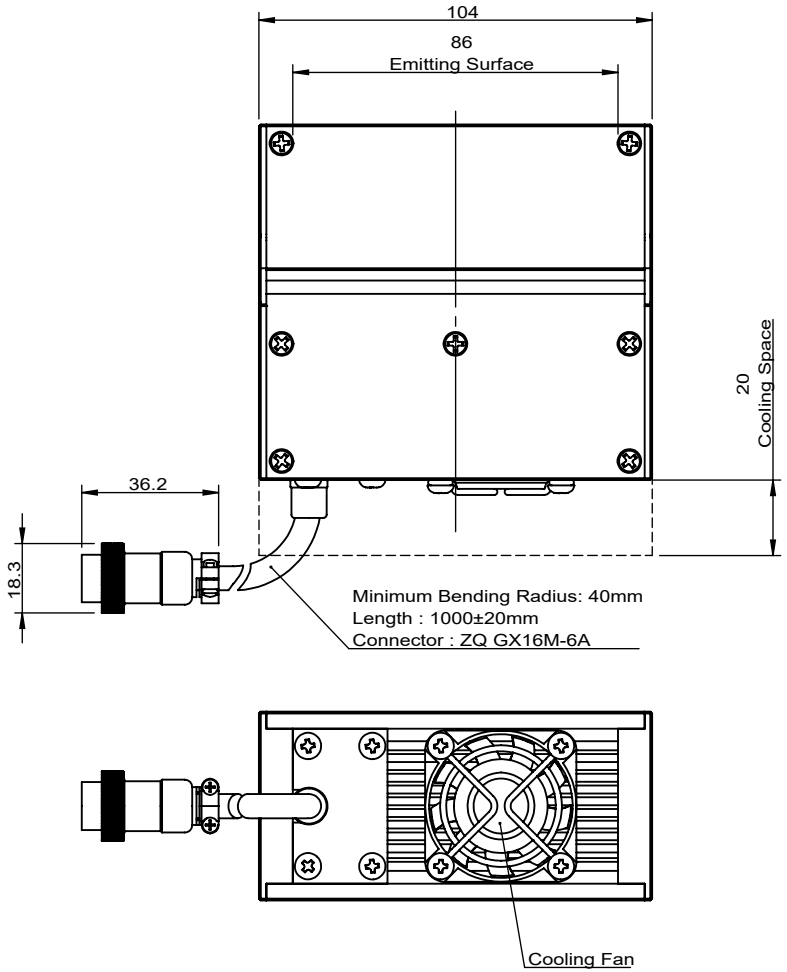

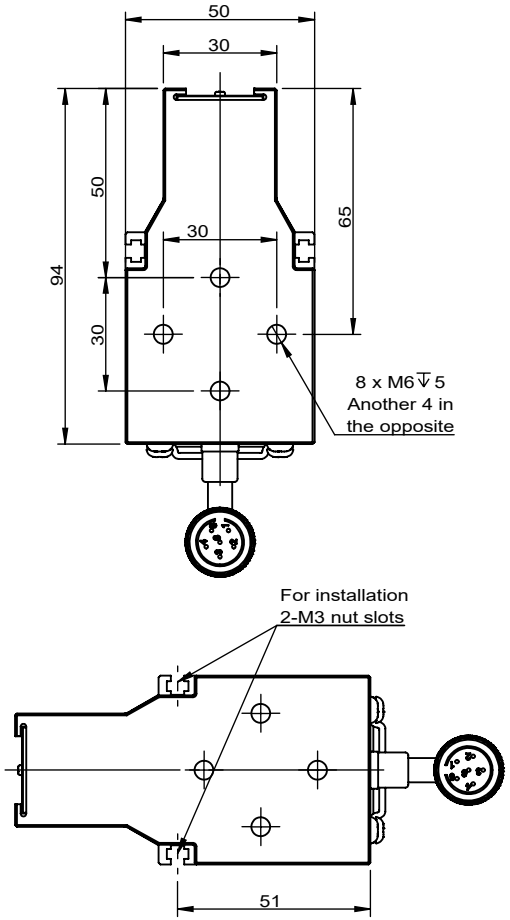

View Angle		Standard Difference	IT14
Paper Size	A 4	Scale	1:2
Drawing Date	2021/6/24	Revised Date	2023/8/1

Remark

Advised Controller:
OPT-APA6024
OPT-DPA6024

OPT® Machine Vision OPT MACHINE VISION

OPT-LSSX104-W

Copyright © 2011 by OPT
All Rights Reserved

Drawing Code	KFBZ20230801KF5301

Version V1.1