Optical Specification				
Model		OPT-MCT28/4.0-0.10X		
Focal Length (mm)		28		
Adjustion Type		Manual		
Aperture		F4.0～F22		
Sensor Ø(mm)		30		
Resolution (μm)		7		
Magnification		0.01X	0.10X	0.28X
Distortion		＜0.55%	＜0.5%	＜0.4%
Working Distance (mm)		2794.0	275.9	95.9
Flange Focal Distance Ø(mm)		22.0	22.0	22.0
Field of View Ø(mm)		3000.0	300.0	107.1
O/I Distance (mm)		2865.8	350.1	175.2
Effective Diameter	Front Ø(mm)	29.4		
	Back Ø(mm)	12.7		
Mount		M42		
Weight (kg)		0.17		
Size (mm)		Ø50×59.6		
Filter Thread (mm)		M38×0.5-6H		
Working Temperature		-20°C～+60°C		

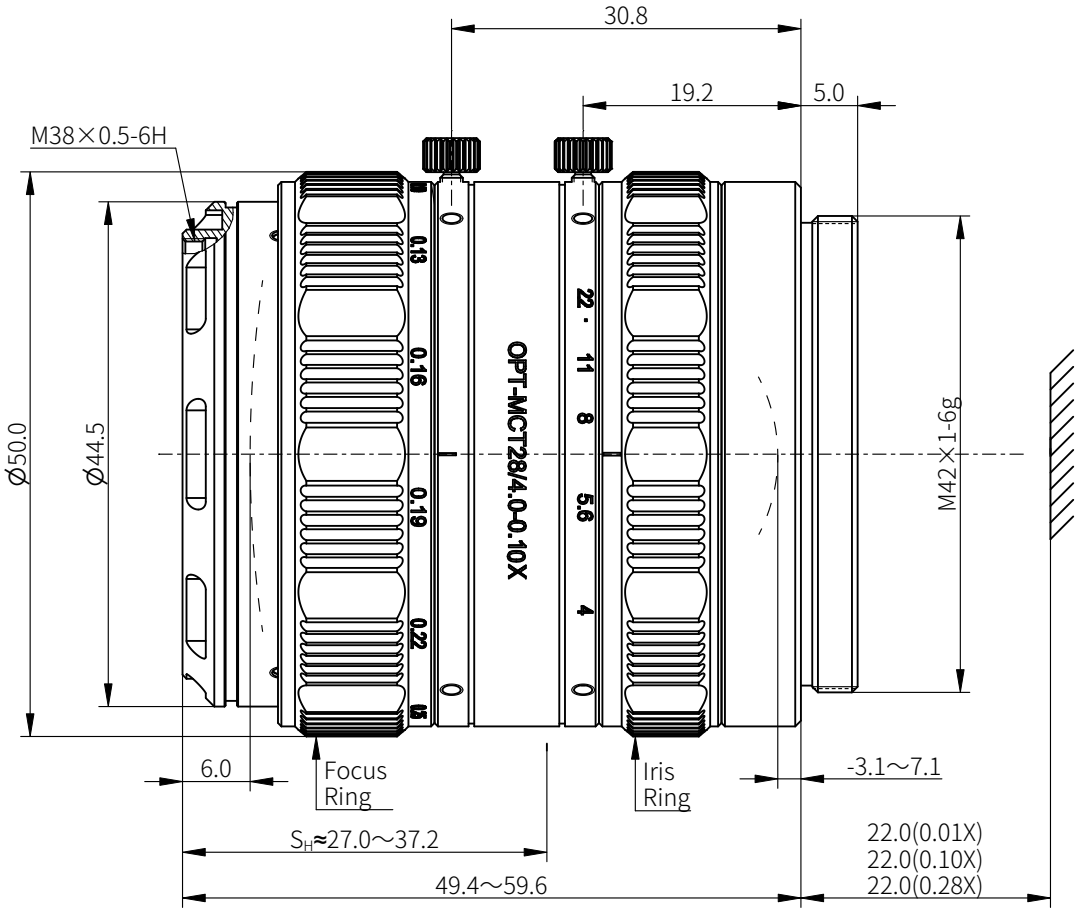

View Angle		Item	Signature	Date	OPT Machine Vision Tech Co., Ltd.			
		Drawing						
Standard Difference	IT14	Design			All Rights Reserved			
		Check						
Drawing Code		Scale	3:2		Name	OPT-MCT28/4.0-0.10X		
		Paper Size	A4		Unit	mm	Page 1 / 1	Version V1.0