Optical Specification			
Model		OPT-MCT35/4.5-0.1X	
Focal Length (mm)		35	
Adjustion Type		Manual	
Aperture		F4.5～F16	
Sensor Ø(mm)		30	
Resolution (μm)		7	
Magnification		0.04X	0.10X	0.16X
Distortion		＜0.25%	＜0.20%	＜0.30%
Working Distance (mm)		878.3	355.0	226.3
Flange Focal Distance (mm)		12.0	12.0	12.0
Field of View Ø(mm)		750.0	300.0	187.5
O/I Distance (mm)		943.2	420.3	291.4
Effective Diameter	Front Ø(mm)	17.4		
	Back Ø(mm)	16.4		
Mount		M42		
Weight (kg)		0.15		
Size (mm)		Ø43.5×53.3		
Filter Thread (mm)		M37.5×0.5-6H		
Working Temperature		-20°C～+60°C		

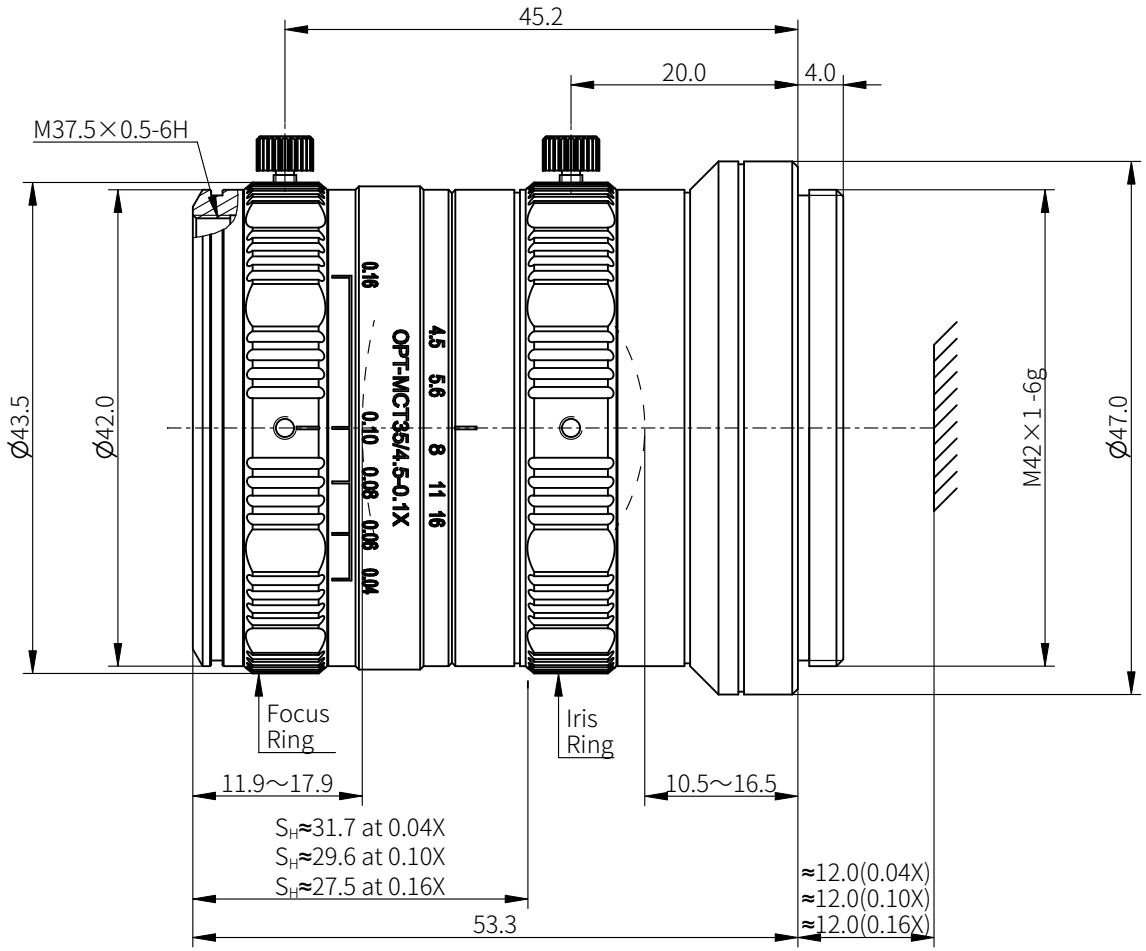

View Angle		Item	Signature	Date	OPT Machine Vision Tech Co., Ltd.				
		Drawing							
Standard Difference	IT14	Design			All Rights Reserved				
		Check							
Drawing Code		Scale	3:2		Name	OPT-MCT35/4.5-0.1X			
		Paper Size	A4		Unit	mm	Page 1 / 1	Version	V1.0