Optical Specification				
Model		OPT-MCT40/4.0-0.1X		
Focal Length (mm)		40		
Adjustion Type		Manual		
Aperture		F4.0～F22		
Sensor Ø(mm)		30		
Resolution (μm)		7		
Magnification		0.04X	0.10X	0.16X
Distortion		＜0.46%	＜0.09%	＜0.32%
Working Distance (mm)		1003.6	404.6	258.4
Flange Focal Distance (mm)		12.0	12.0	12.0
Field of View Ø(mm)		750.0	300.0	187.5
O/I Distance (mm)		1072.7	475.1	329.0
Effective Diameter	Front Ø(mm)	20.6		
	Back Ø(mm)	19.6		
Mount		M42		
Weight (kg)		0.17		
Size (mm)		Ø43.5×58.6		
Filter Thread (mm)		M37.5×0.5-6H		
Working Temperature		-20°C～+60°C		

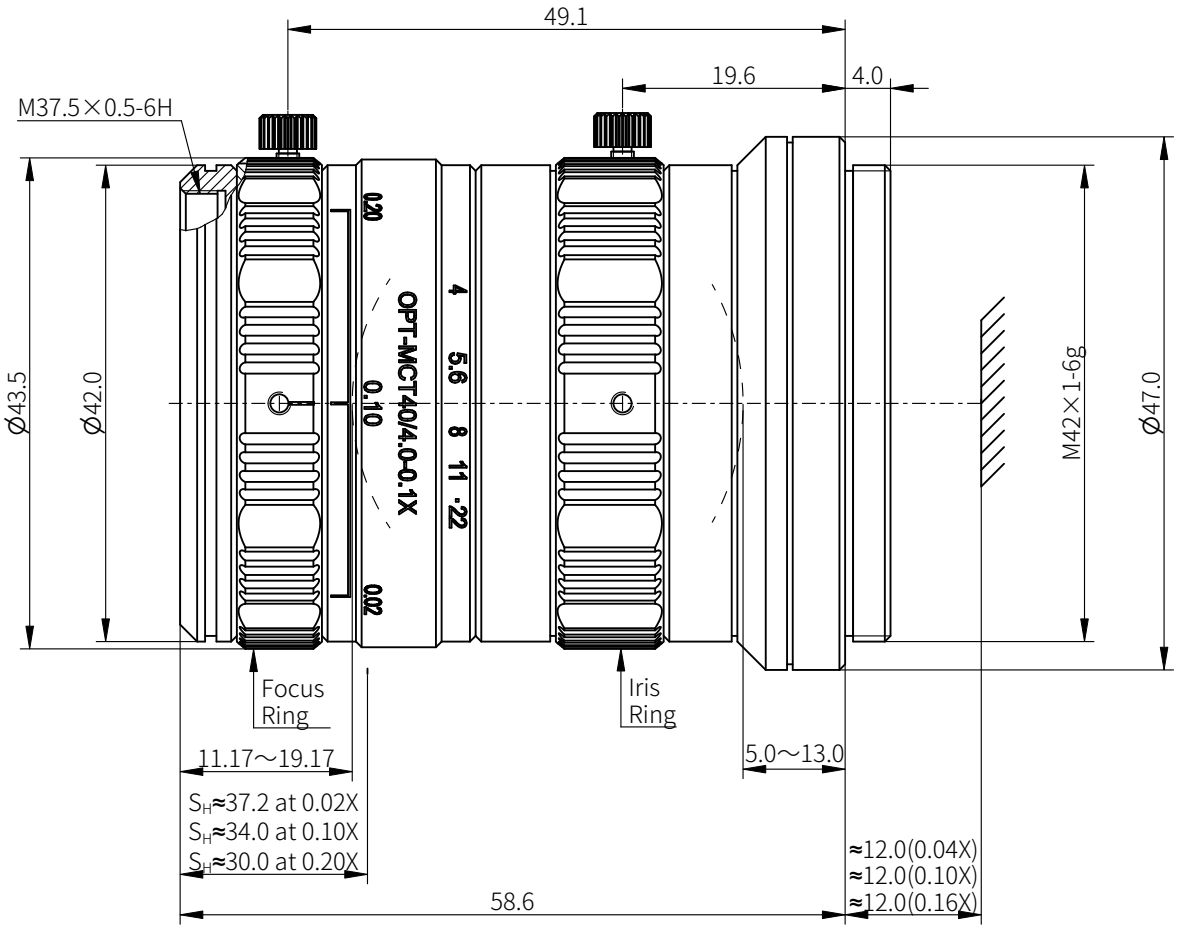

View Angle		Item	Signature	Date	OPT Machine Vision Tech Co., Ltd.			
		Drawing						
Standard Difference	IT14	Design			All Rights Reserved			
		Check						
Drawing Code		Scale	3:2		Name	OPT-MCT40/4.0-0.1X		
		Paper Size	A4		Unit	mm	Page 1 / 1	Version V1.0

All Rights Reserved