Model	Color	Voltage	Power
OPT-MSRI7045-W	White	24V	4.8W
OPT-MSRI7045-R	Red	24V	3W
OPT-MSRI7045-G	Green	24V	4.7W
OPT-MSRI7045-B	Blue	24V	4.7W

JST SMR-02V-B, 2 Pin
or Compactible Connector

Pin	Polarity
1	+
2	-

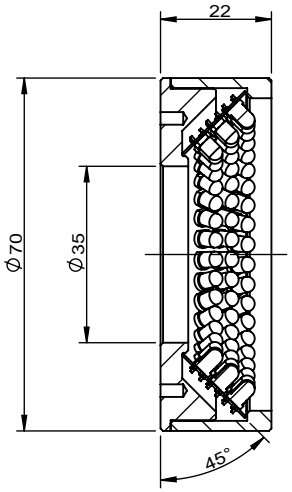

Sectional View
A-A

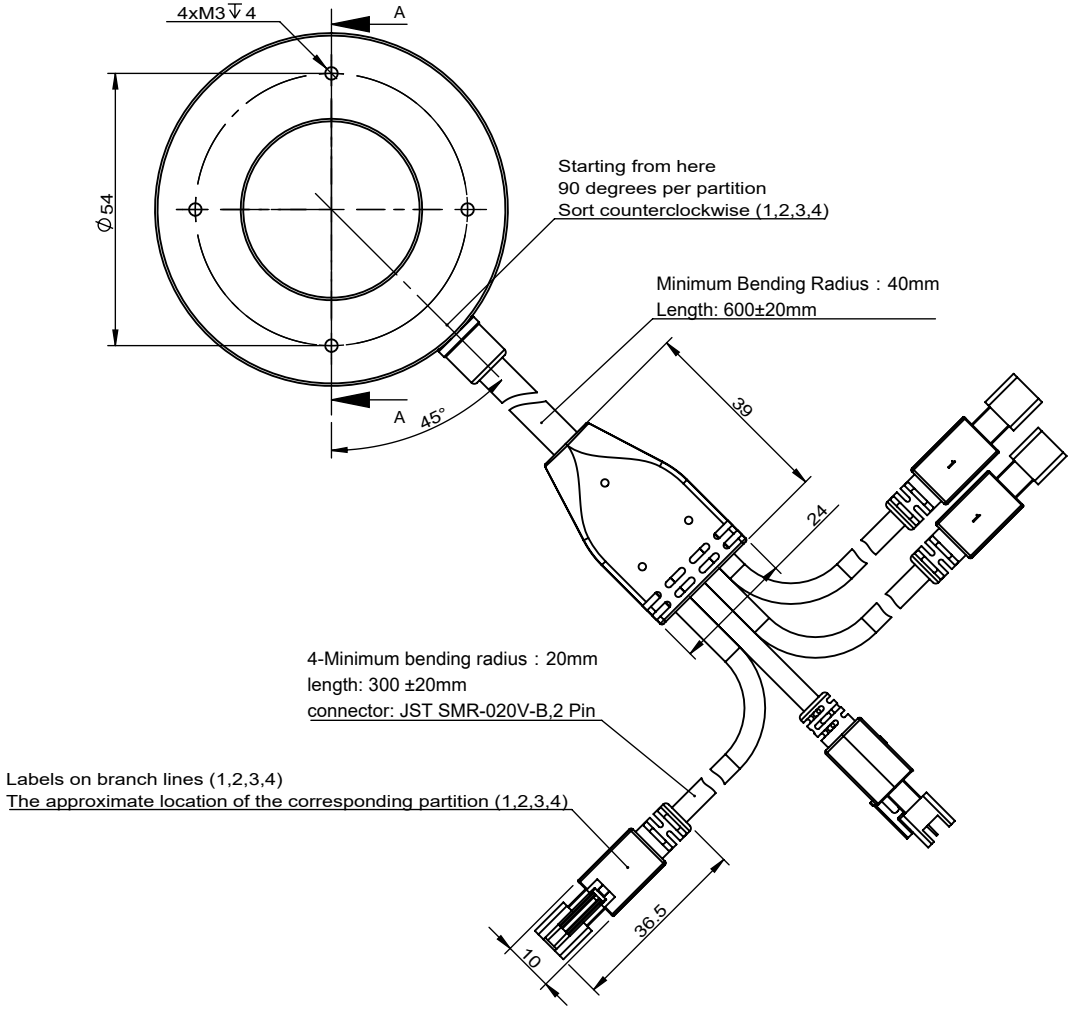

View Angle		Standard Difference	IT14
Paper Size	A 4	Scale	1:1
Drawing Code	KFBZ20231106KF3802	Drawing Date	2018/8/28
		Revised Date	2023/11/6

Remark

1.Advised Controller:
OPT-DPA2024E
OPT-AP1024F
2.The Emitting surface is evenly divided into four parts,Each part can be individually controlled,Or use multiple regions together.

OPT® Machine Vision OPT MACHINE VISION

OPT-MSRI7045-X

Version V1.0

Copyright © 2011 by OPT
All Rights Reserved