Model	Color	Voltage	Power
OPT-MSRI7045-W	White	24V	4.8W
OPT-MSRI7045-R	Red	24V	3W
OPT-MSRI7045-G	Green	24V	4.7W
OPT-MSRI7045-B	Blue	24V	4.7W

JST SMR-02V-B, 2 Pin
or Compactible Connector

Pin	Polarity
1	+
2	-

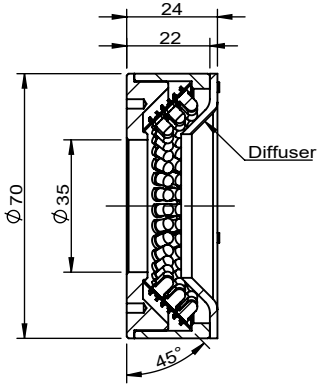

Sectional View
A-A

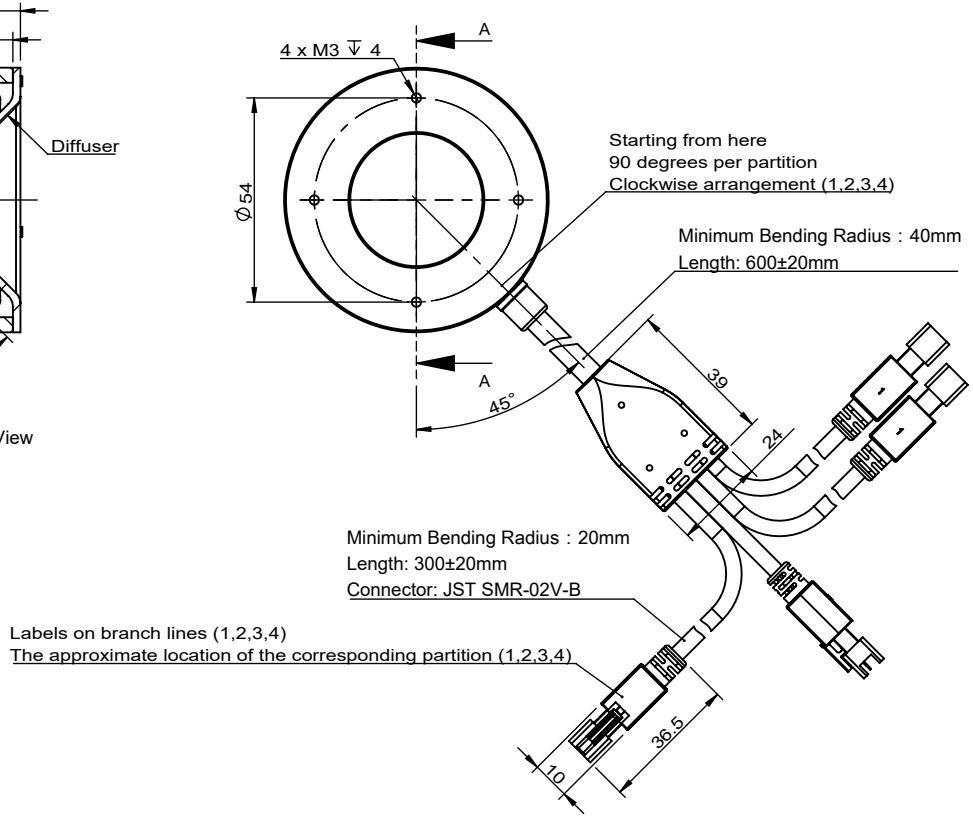

View Angle		Standard Difference	IT14	Remark	OPT® Machine Vision OPT MACHINE VISION
Paper Size	A 4	Scale	1:1	1.Advised Controller: OPT-DPA2024E OPT-AP1024F 2.With Diffuser 3.The Emitting surface is evenly divided into four parts,Each part can be individually controlled,Or use multiple regions together.	OPT-MSRI7045-X
Drawing Code	KFBZ20231107KF3802	Drawing Date	2018/8/28	Revised Date	2023/11/6	Version	V1.0U

Copyright © 2011 by OPT
All Rights Reserved