Model	Color	Voltage	Power
OPT-MSRI9045-W	White	24V	7.2W
OPT-MSRI9045-R	Red	24V	4.7W
OPT-MSRI9045-G	Green	24V	6.9W
OPT-MSRI9045-B	Blue	24V	7.7W

JST SMR-02V-B, 2 Pin
or Compatible Connector

Pin	Polarity
1	+
2	-

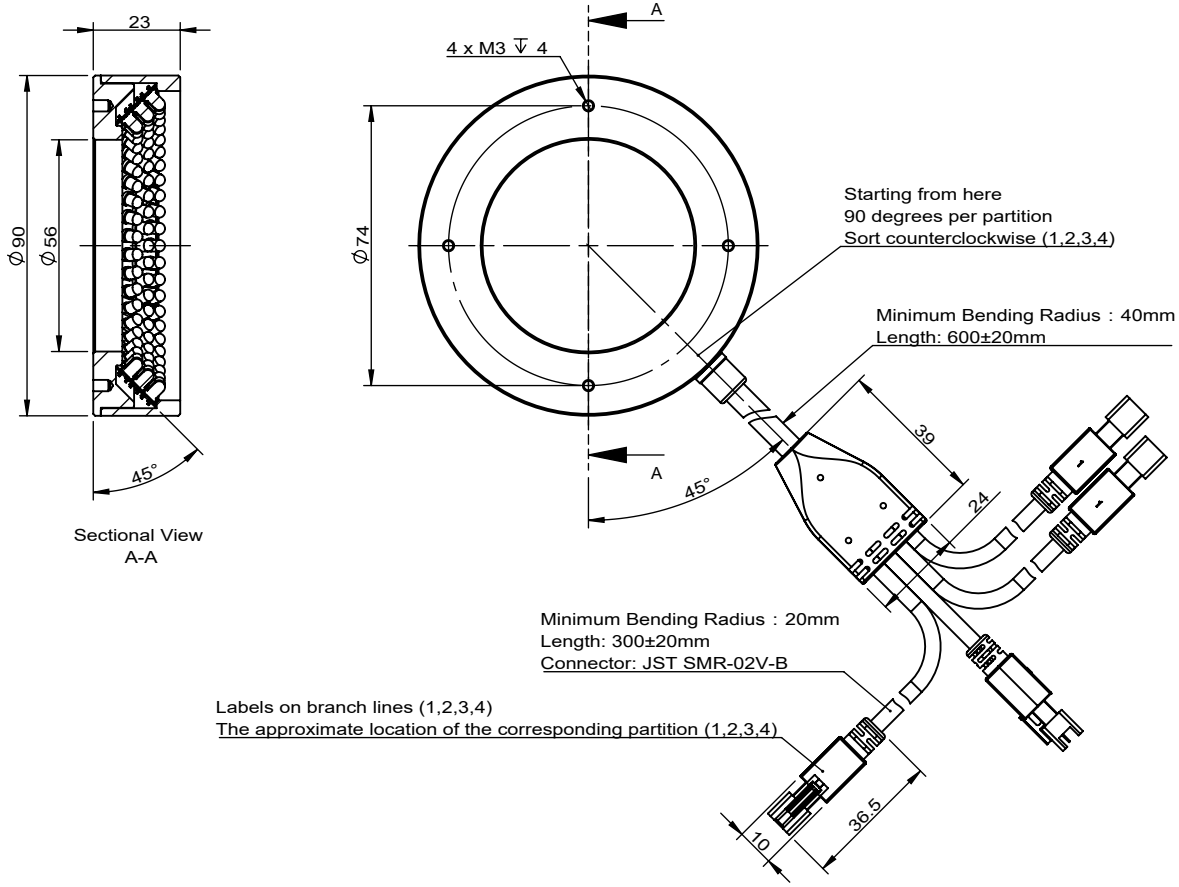

View Angle		Standard Difference	IT14	Remark	OPT® Machine Vision OPT MACHINE VISION
Paper Size	A 4	Scale	1:1	1.Advised Controller: OPT-DPA2024E OPT-AP1024F 2.The Emitting surface is evenly divided into four parts,Each part can be individually controlled,Or use multiple regions together.	OPT-MSRI9045-X
Drawing Code KFBZ20231106KF3806		Drawing Date	2018/8/28	Revised Date	2023/11/6	Version V1.0

Copyright © 2011 by OPT
All Rights Reserved