| Model | Color | Current | Power |
|---|---|---|---|
| OPT-MSRID350-W | White | 2.6A | 62.4W |
| OPT-MSRID350-B | Red | 2.2A | 49.5W |
| OPT-MSRID350-G | Green | 2.3A | 54.9W |
| OPT-MSRID350-R | Blue | 2.3A | 54.9W |

JST SMR-02V-B, 2 Pin
or Compactible Connector

| Pin | Polarity |
|---|---|
| 1 | + |
| 2 | - |

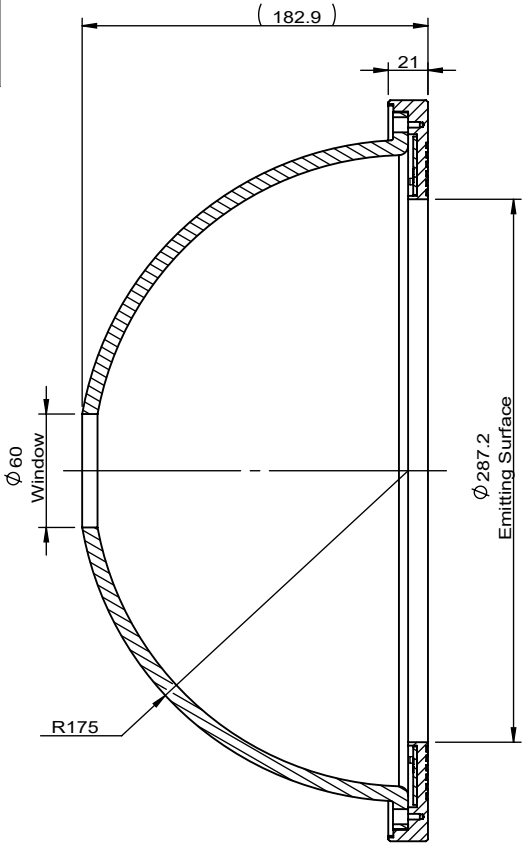


Sectional View
A-A

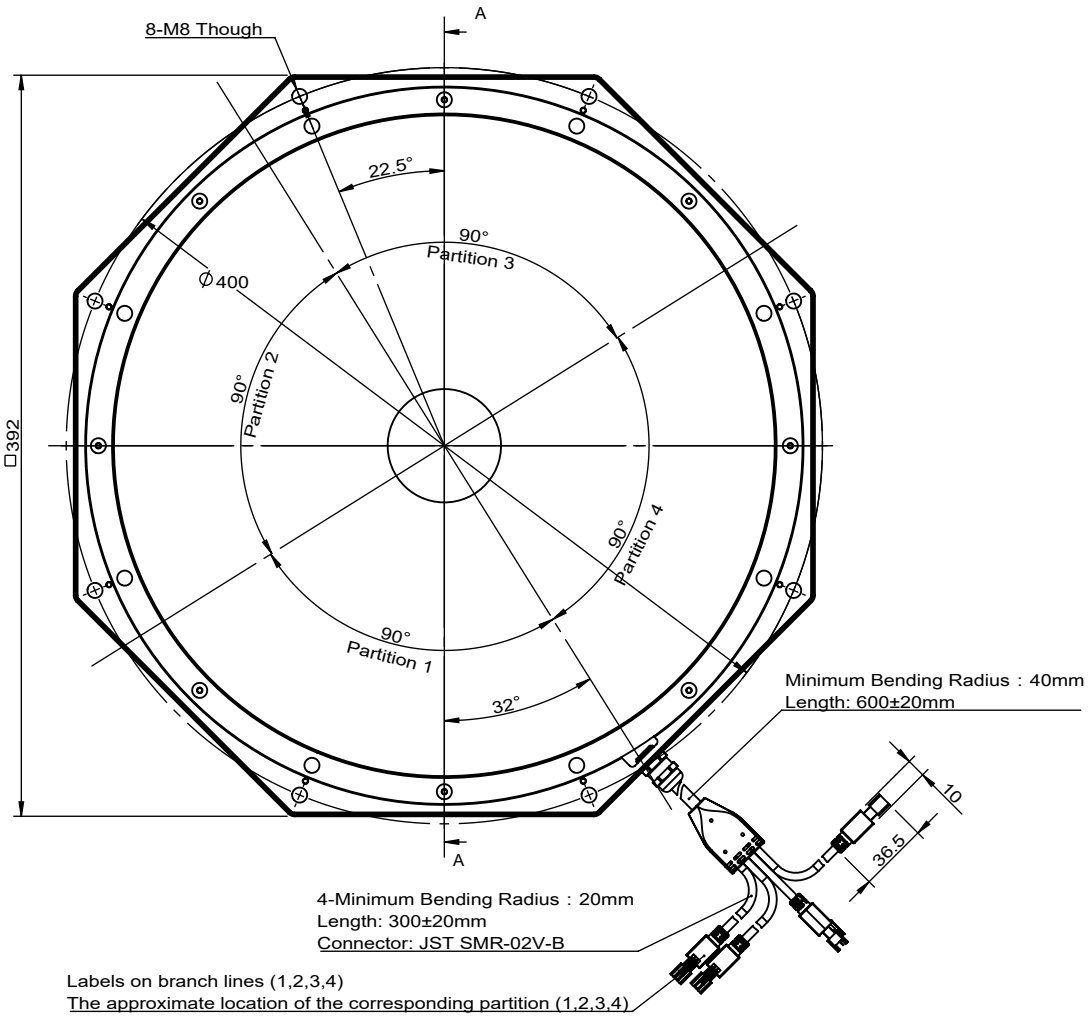


| View Angle | | Standard Difference | IT14 |
|---|---|---|---|
| Paper Size | A 4 | Scale | 1:4 |
| Drawing Date | 2019/4/1 | Revised Date | 2024/1/17 |

Remark

1.Advised Controller:
OPT-DPA2024E
OPT-AP1024F
2.With Diffuser
3.The Emitting surface is evenly divided into 4 parts,Each part can be individually controlled,Or use multiple regions together.

OPT® Machine Vision OPT MACHINE VISION

# OPT-MSRID350-X

Version V1.0

Copyright © 2011 by OPT
All Rights Reserved

Drawing Code KFBZ20240117KF3801