| Model | Color | Voltage | Power |
|---|---|---|---|
| OPT-RID80-W | White | 24V | 5.8W |
| OPT-RID80-R | Red | 24V | 5.1W |
| OPT-RID80-G | Green | 24V | 4.8W |
| OPT-RID80-B | Blue | 24V | 5.8W |

JST SMR-02V-B, 2-Pin
or Compatible Connector

| Pin | Polarity |
|---|---|
| 1 | + |
| 2 | - |

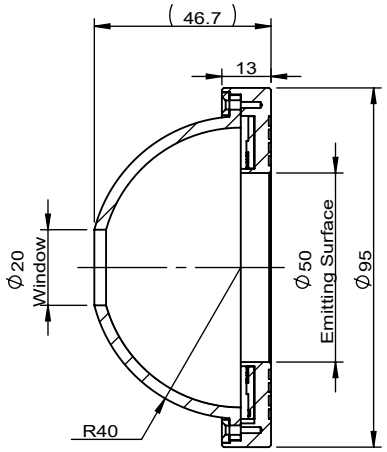


Sectional View
A-A

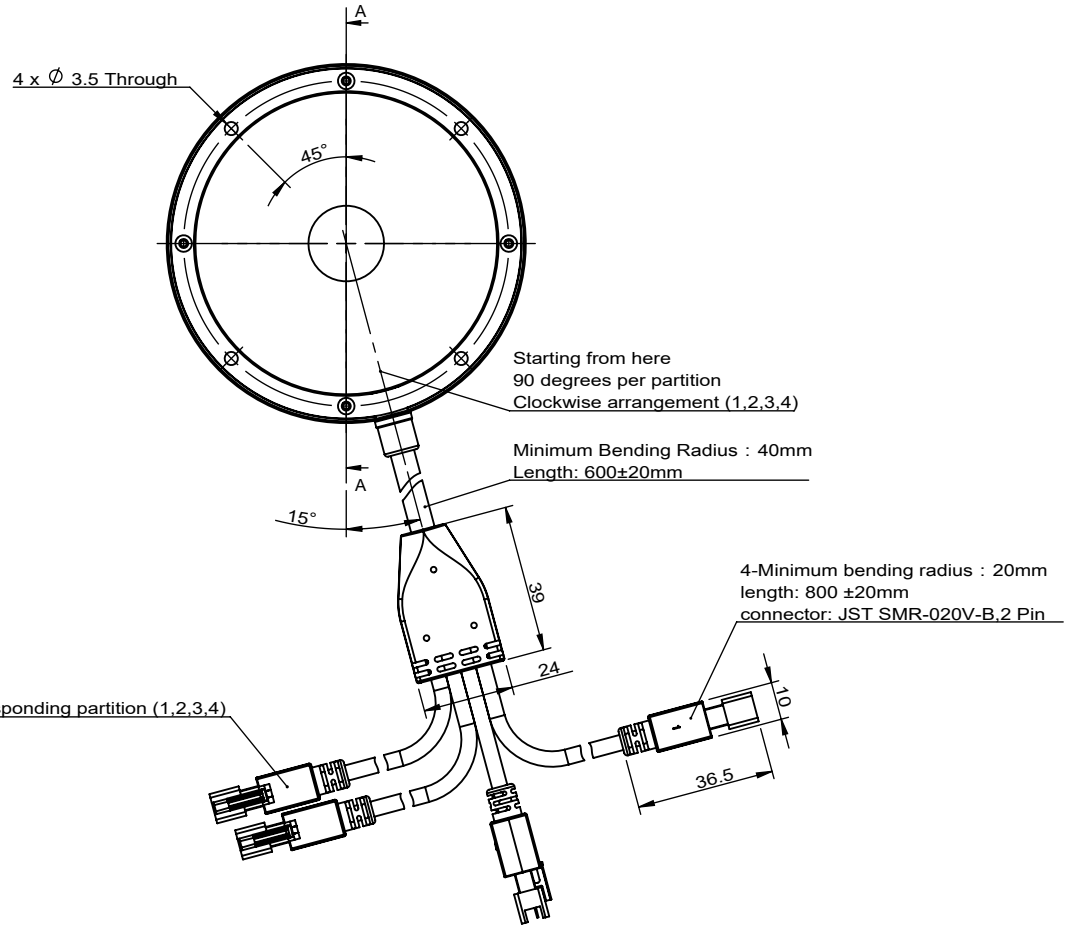


| | | | | | |
|---|---|---|---|---|---|
| View Angle | | Standard Difference | IT14 | Remark | OPT® Machine Vision OPT MACHINE VISION |
| Paper Size | A 4 | Scale | 1:2 | 1.Advised Controller:<br>OPT-DPA2024E<br>OPT-AP1024F<br>2.With Diffuser<br>3.The Emitting surface is evenly divided into four parts,Each part can be individually controlled,Or use multiple regions together. | OPT-MSRID80-X |
| Drawing Date | 2021/4/17 | Revised Date | 2023/10/10 | | Version V1.0 |

Copyright © 2011 by OPT
All Rights Reserved

Drawing Code KFBZ20231010KF3801