Model	Color	Voltage	Power
OPT-ULI19632-UV365	Ultraviolet (365nm)	24V	7.9W
OPT-ULI19632-UV375	Ultraviolet (375nm)	24V	8.2W

JST SMR-02V-B, 2 Pin or Compatible Connector

Pin	Polarity
1	+
2	-

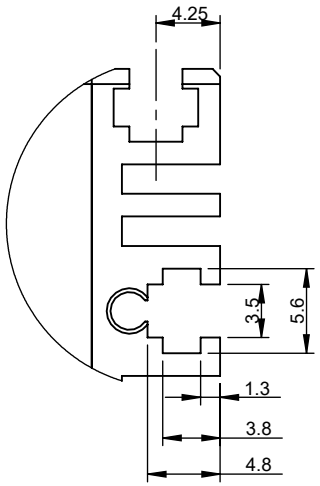

Partial View A
Scale 2 : 1

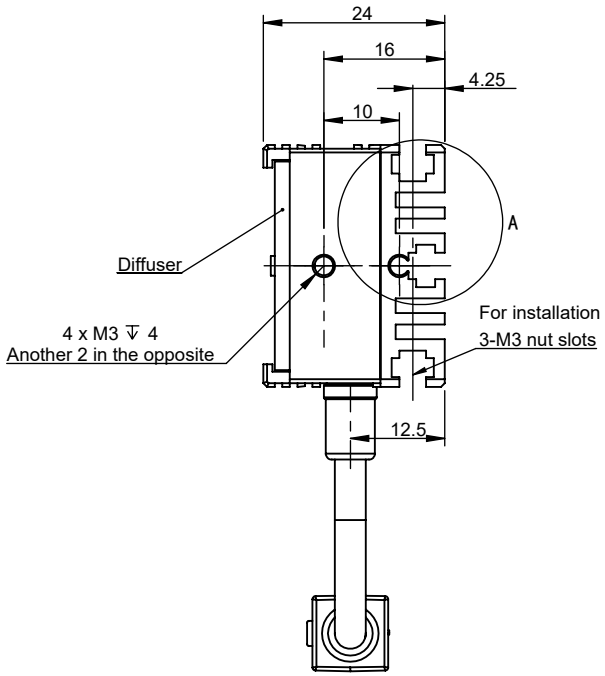

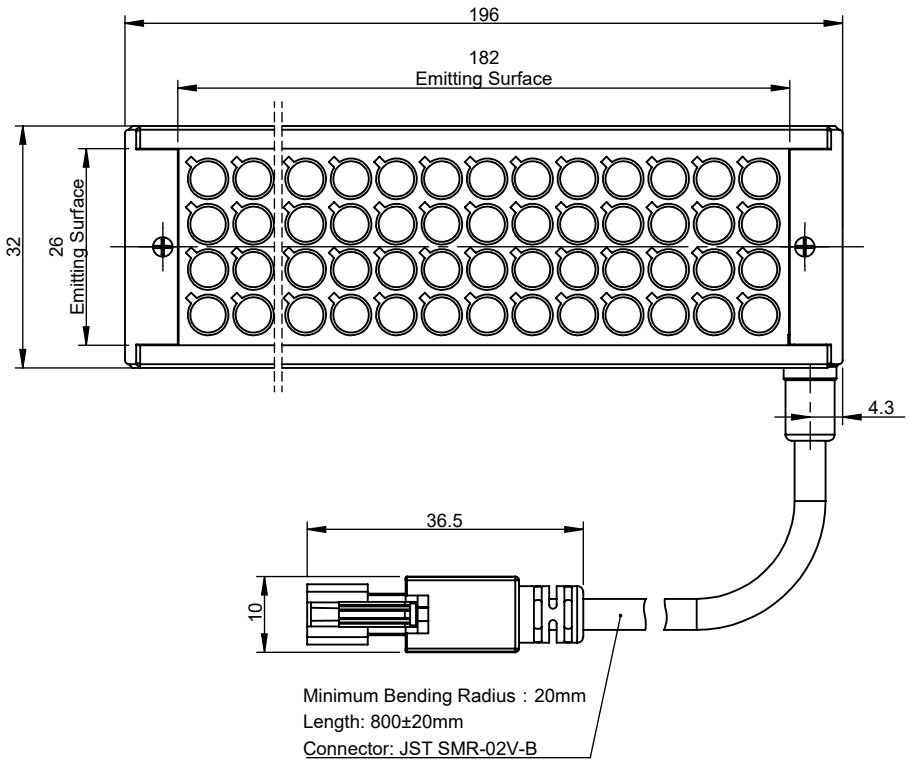

View Angle		Standard Difference	IT14	Remark	OPT® Machine Vision OPT MACHINE VISION
Paper Size	A 4	Scale	1:1	1.With Diffuser 2.Advised Controller: OPT-AP1024F OPT-DPA2024E	OPT-ULI19632W-UV
Drawing Date	2018-08-28	Revised Date	2024-12-03		Version V1.0U

Copyright © 2011 by OPT
All Rights Reserved

Drawing Code KFBZ20241203KF1872