Model	Color	Voltage	Power
OPT-URI7030-UV365	Ultraviolet (365nm)	24V	3.4W
OPT-URI7030-UV375	Ultraviolet (375nm)	24V	3.6W

JST SMR-02V-B, 2 Pin or Compactible Connector

Pin	Polarity	Wire Color
1	+	Red
2	-	Black

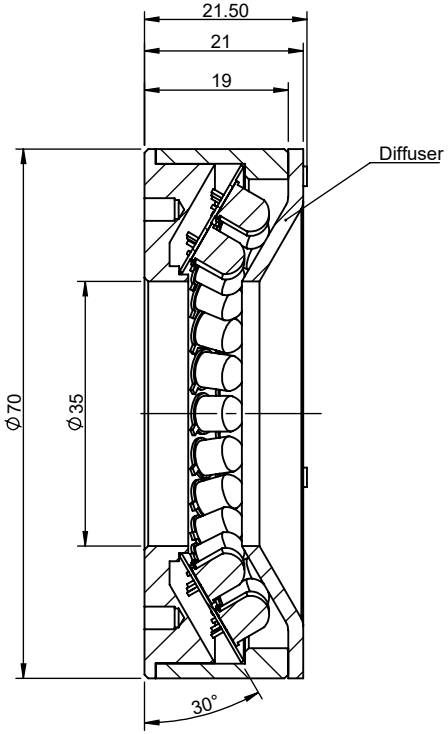

Sectional View
A-A

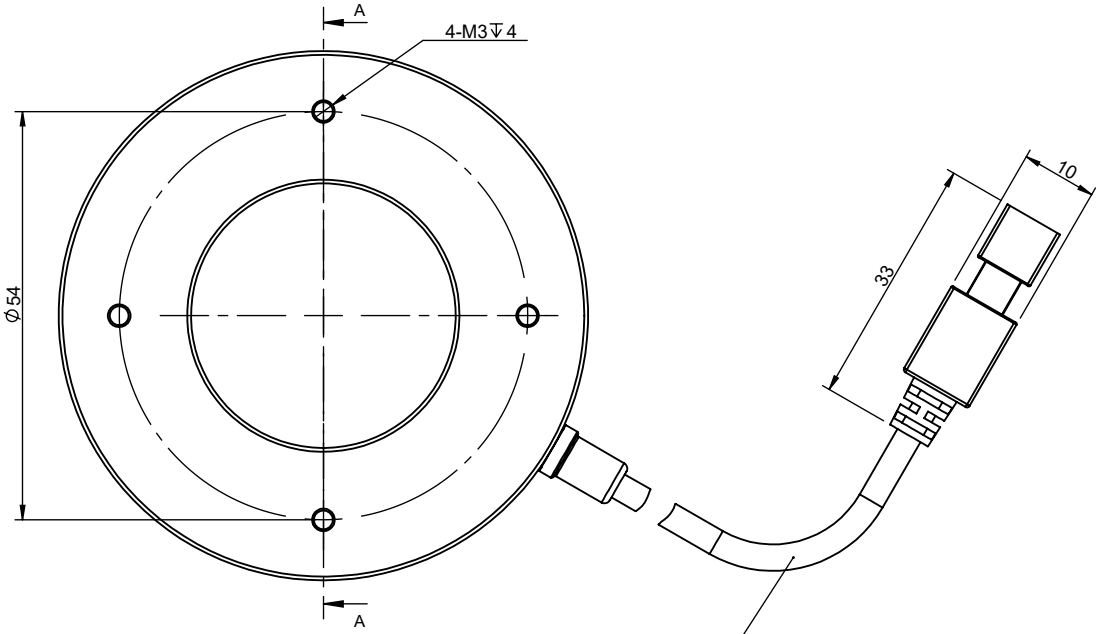

Minimum Bending Radius : 20mm
Length: 800±20mm
Connector: JST SMR-02V-B

View Angle		Standard Difference	IT14	Remark	OPT® Machine Vision OPT MACHINE VISION
Paper Size	A 4	Scale	1:1	1. With Diffuser ; 2.Advised Controller: OPT-AP1024F OPT-DPA2024E	OPT-URI7030-UV
Drawing Date	2018-11-29	Revised Date	2023-08-30		Version V1.0U

Copyright © 2011 by OPT
All Rights Reserved

Drawing Code KFBZ20230830KF4501