Model	Color	Voltage	Power
OPT-URI9000W-UV365	Ultraviolet (365nm)	24V	5.2W
OPT-URI9000W-UV375	Ultraviolet (375nm)	24V	5.6W

JST SMR-02V-B, 2 Pin or Compactible Connector

Pin	Polarity	Wire Color
1	+	Red
2	-	Black

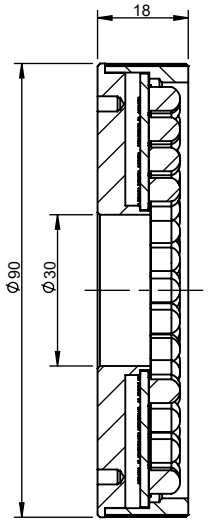

Sectional View
A-A

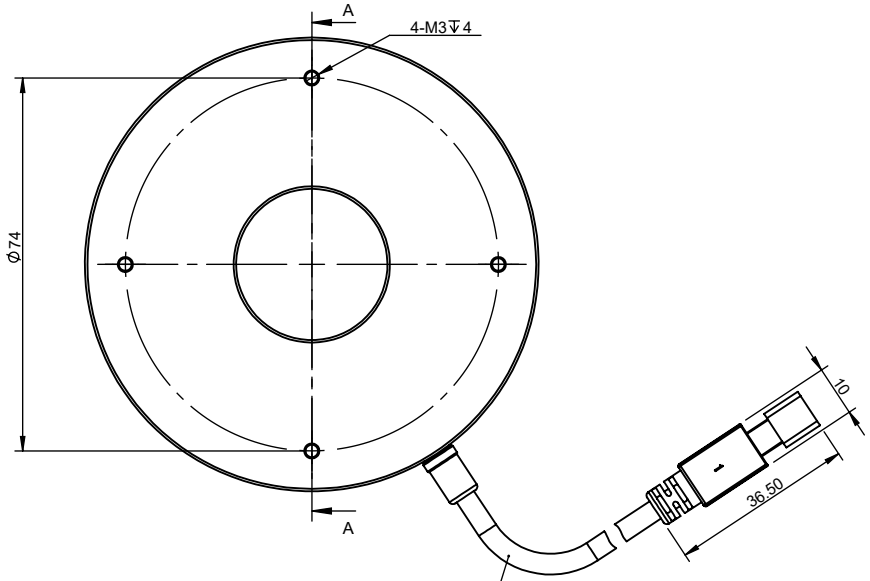

Minimum Bending Radius: 20mm
Length : 800±20mm
Connector : JST SMR-02V-B

View Angle		Standard Difference	IT14	Remark	OPT® Machine Vision OPT MACHINE VISION
Paper Size	A 4	Scale	1:1	Advised Controller: OPT-AP1024F OPT-DPA2024E	OPT-URI9000W-UV
Drawing Date	2018-11-29	Revised Date	2024-12-03		Version V1.0

Copyright © 2011 by OPT
All Rights Reserved

Drawing Code KFBZ20241203KF1899