Optical Specification			
Model		OPT-VCT100/5.6-0.17X	
Focal Length (mm)		100	
Adjustion Type		Manual	
Aperture		F5.6～F45	
Sensor Ø(mm)		82	
Resolution (μm)		7	
Magnification		0.08X	0.17X	0.33X
Distortion		＜0.045%	＜0.05%	＜0.13%
Working Distance (mm)		1269.1	672.1	372.1
Flange Focal Distance (mm)		100.2	108.5	125.2
Field of View Ø(mm)		1025.0	482.4	248.5
O/I Distance (mm)		1400.8	812.1	528.8
Effective Diameter	Front Ø(mm)	26.7		
	Back Ø(mm)	21.9		
Mount		V38		
Weight (kg)		0.14		
Size (mm)		Ø47.7×31.5		
Filter Thread (mm)		M38×0.5-6H		
Working Temperature		-20°C～+60°C		

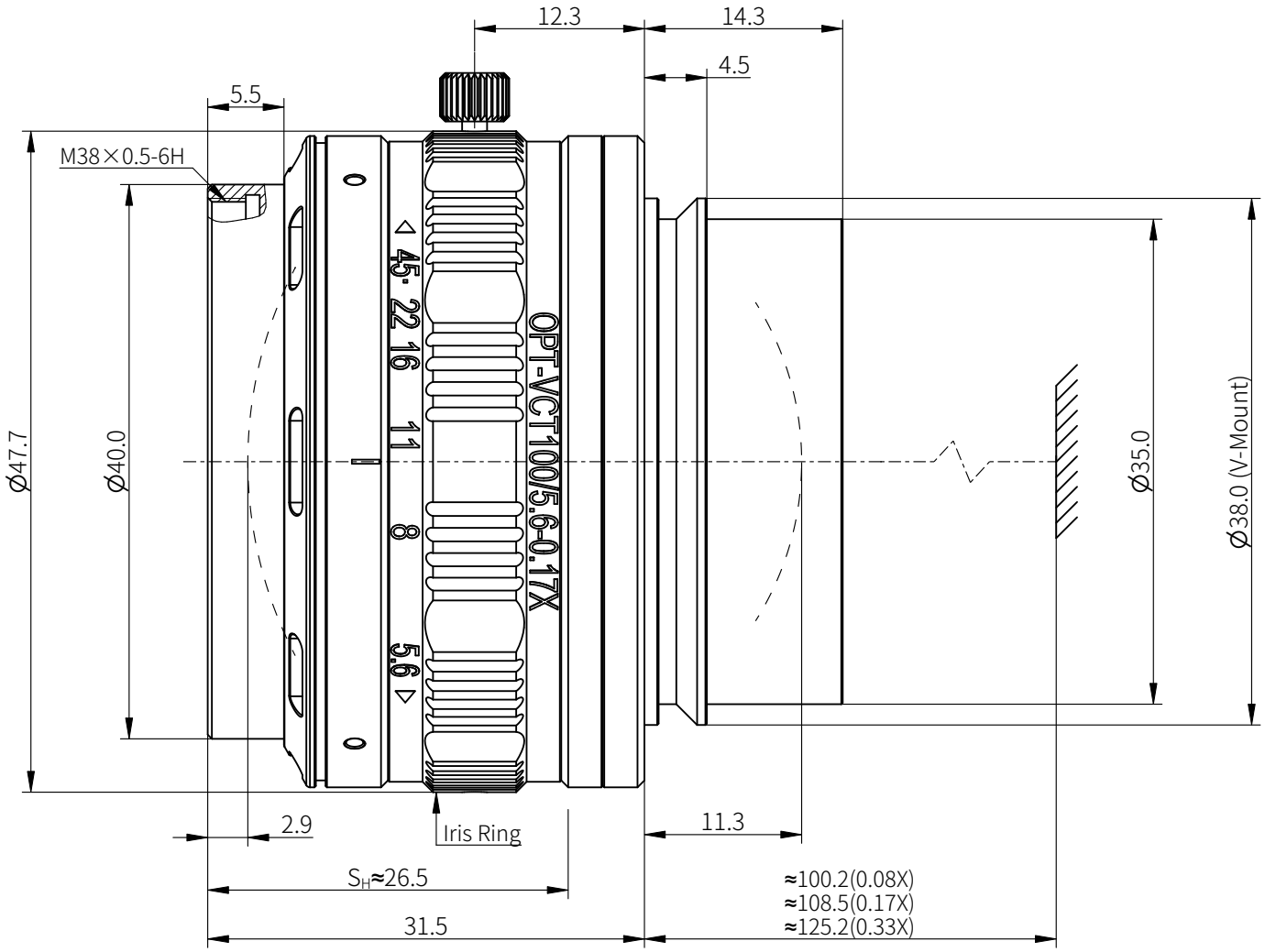

View Angle		Item	Signature	Date	OPT Machine Vision Tech Co., Ltd.			
		Drawing						
Standard Difference	IT14	Design			All Rights Reserved			
		Check						
Drawing Code		Scale	2:1		Name	OPT-VCT100/5.6-0.17X		
		Paper Size	A4		Unit	mm	Page 1 / 1	Version V1.0