Optical Specification			
Model	OPT-VCT20/4.5-0.10X		
Focal Length (mm)	21		
Adjustion Type	Manual		
Aperture	F4.5～F16		
Sensor Ø(mm)	30		
Resolution (μm)	7		
Magnification	0.04X	0.10X	0.22X
Distortion	＜0.2%	＜0.6%	＜0.95%
Working Distance (mm)	510.7	206.2	90.7
Flange Focal Distance (mm)	30.5	31.8	34.3
Field of View Ø(mm)	750.0	300.0	136.4
O/I Distance (mm)	568.7	265.5	152.5
Effective Diameter — Front Ø(mm)	28.9		
Effective Diameter — Back Ø(mm)	15.3		
Mount	V38		
Weight (kg)	0.14		
Size (mm)	Ø47.7×27.5		
Filter Thread (mm)	M38×0.5-6H		
Working Temperature	-20°C～+60°C		

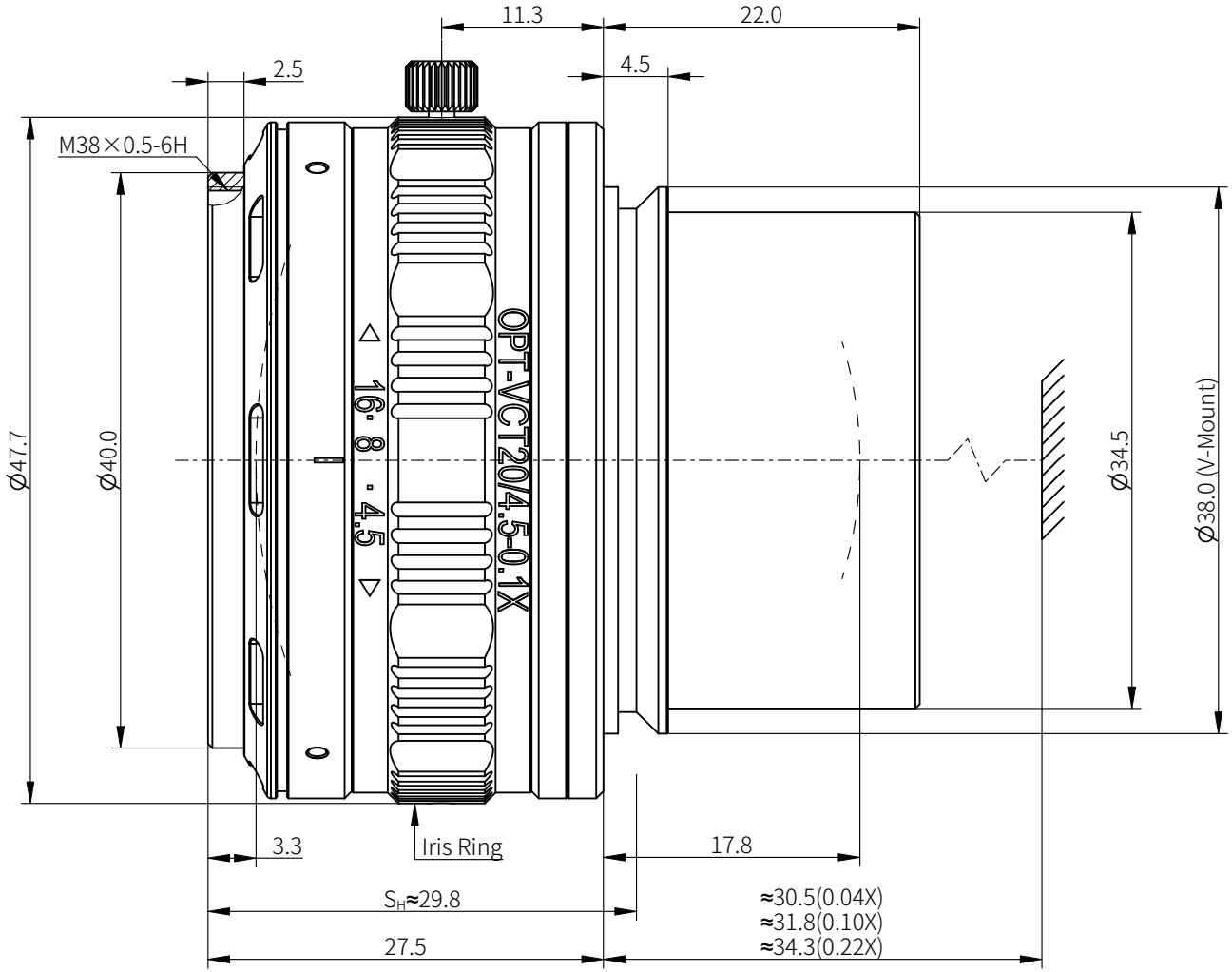

View Angle		Item	Signature	Date	OPT Machine Vision Tech Co., Ltd.
		Drawing			
Standard Difference	IT14	Design			All Rights Reserved
		Check			
Drawing Code		Scale	2:1	Name	OPT-VCT204.5-0.10X
		Paper Size	A4	Unit	mm · Page 1 / 1 · Version V1.0

All Rights Reserved