Optical Specification			
Model	OPT-VCT50/2.8-0.17X-V1.0		
Focal Length(mm)	50		
F NO.	F2.8-F16		
Image Circle(mm)	44		
Mount	V38		
Weight	0.15kg		
Size(mm)	Ø47.70×33.20		
Filter(mm)	M38×P0.5		
Working Temperature	-20℃~60℃		
Distortion	0.31%	0.08%	0.29%
Magnification	0.08X	0.17X	0.33X
Working Distance(mm)	632	328.9	183.8
Flange Back Length (mm)	38.5	42.6	50.2
O/I Distance(mm)	704.1	405.1	267.6

unit:mm

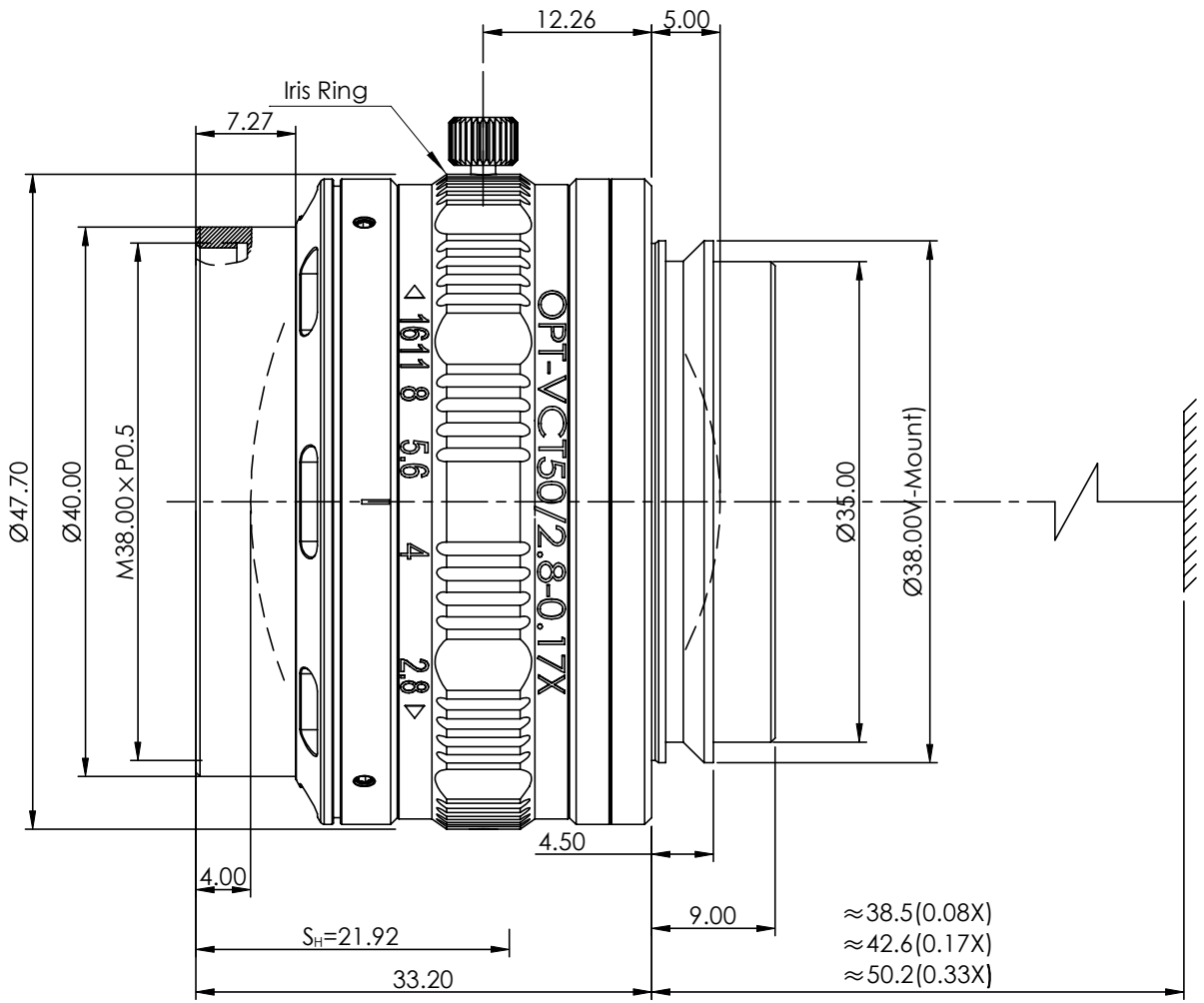

View Angle	Remark	Item	Signature	Date	OPT Machine Vision Co.,Ltd.
		Drawing			
Standard Difference		Design			OPT-VCT50/2.8-0.17X-V1.0
		Check			
		Approve			
IT14		Paper Size	A4		
		Revised Date	2020-12-08		Scale / Page 1/1 Total Page / Version A01

Copyright © 2020 by OPT
All Rights Reserved

Drawing Code