Optical Specification			
Model	OPT-VCT60/4.0-0.17X-V1.0		
Focal Length(mm)	61.5		
F NO.	F4.0-F32		
Image Circle(mm)	63		
Mount	V38		
Weight	0.14kg		
Size(mm)	Ø47.70×30.90		
Filter(mm)	M38×P0.5		
Working Temperature	-20℃~60℃		
Distortion	0.30%	0.05%	0.25%
Magnification	0.04X	0.17X	0.33X
Working Distance(mm)	1528	394.3	217
Flange Back Length (mm)	54.4	62.3	72.3
O/I Distance(mm)	1613.9	488.1	320.8

unit:mm

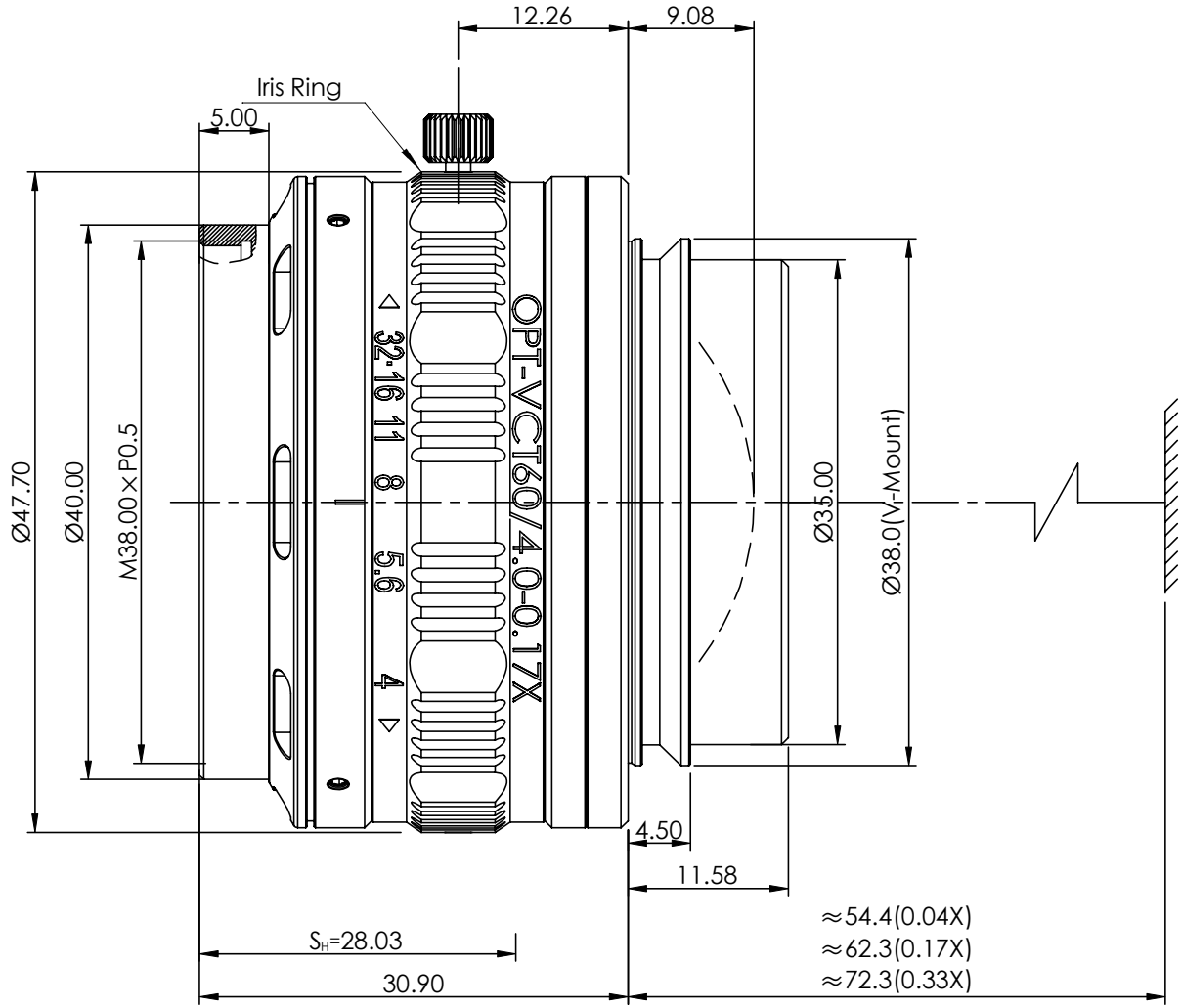

View Angle	Remark	Item	Signature	Date	OPT Machine Vision Co.,Ltd.
		Drawing			
Standard Difference		Design			OPT-VCT60/4.0-0.17X-V1.0
		Check			
		Approve			
IT14		Paper Size	A4		
		Revised Date	2020-12-08		Scale / Page 1/1 Total Page / Version A01

Copyright © 2020 by OPT
All Rights Reserved

Drawing Code