Optical Specification			
Model		OPT-VGP116/4.2-0.26X	
Focal Length (mm)		116	
Adjustion Type		Manual	
Aperture		F4.2～F32	
Sensor Ø(mm)		82	
Resolution (μm)		5	
Magnification		0.22X	0.26X	0.30X
Distortion		＜0.177%	＜0.012%	＜0.169%
Working Distance (mm)		586.8	504.8	444.8
Flange Focal Distance (mm)		103.8	108.4	113.1
Field of View Ø(mm)		372.7	315.4	273.3
O/I Distance (mm)		751.5	674.5	623.8
Effective Diameter	Front Ø(mm)	49.0		
	Back Ø(mm)	44.1		
Mount		V58		
Weight (kg)		0.54		
Size (mm)		Ø68×59.3		
Filter Thread (mm)		M58×0.75-6H		
Working Temperature		-20°C～+60°C		

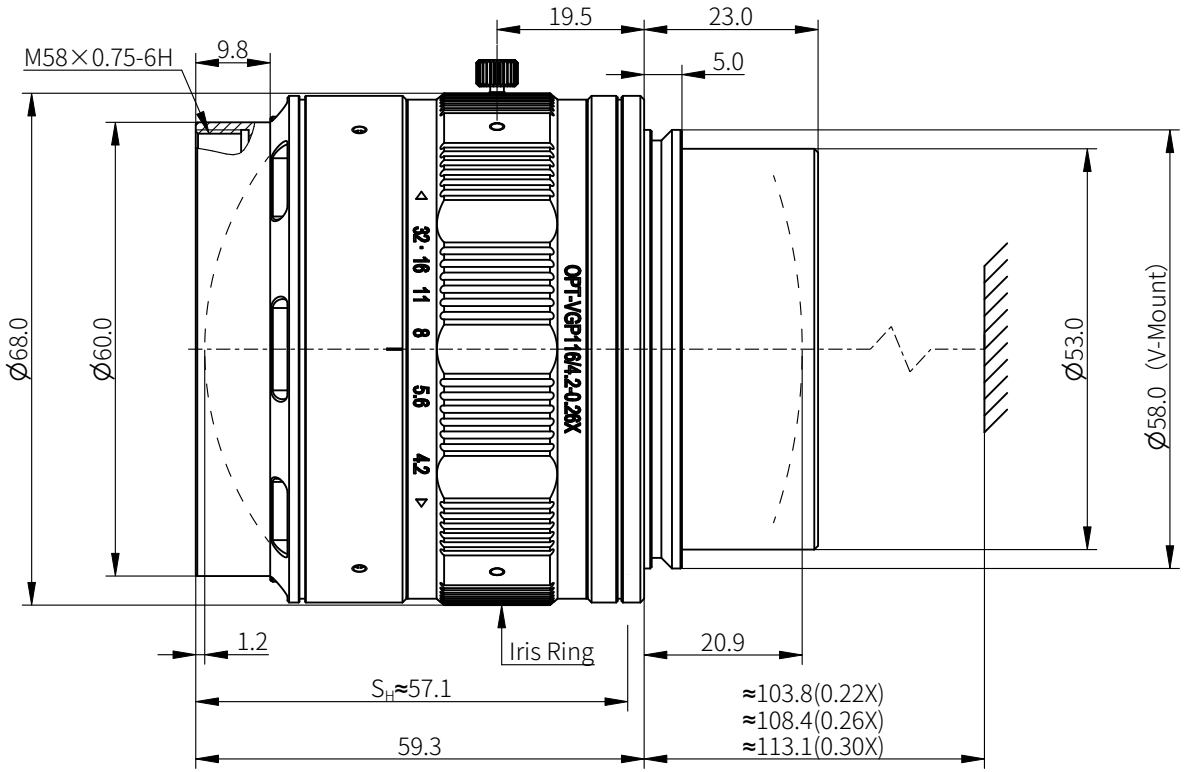

View Angle		Item	Signature	Date	OPT Machine Vision Tech Co., Ltd.			
		Drawing						
Standard Difference	IT14	Design			All Rights Reserved			
		Check						
Drawing Code		Scale	1:1		Name	OPT-VGP116/4.2-0.26X		
		Paper Size	A4		Unit	mm	Page 1 / 1	Version V1.0

All Rights Reserved