| Optical Specification | | | |
|---|---|---|---|
| Model | | OPT-VGP116/4.8-0.75X | |
| Focal Length (mm) | | 116 | |
| Adjustion Type | | Manual | |
| Aperture | | F4.8～F22 | |
| Sensor Ø(mm) | | 82 | |
| Resolution (μm) | | 5 | |
| Magnification | | 0.65X | 0.75X | 0.85X |
| Distortion | | ＜0.08% | ＜0.01% | ＜0.04% |
| Working Distance (mm) | | 248.4 | 224.6 | 206.4 |
| Flange Focal Distance (mm) | | 176.9 | 188.5 | 200.1 |
| Field of View Ø(mm) | | 126.2 | 109.3 | 96.5 |
| O/I Distance (mm) | | 485.4 | 473.2 | 466.6 |
| Effective Diameter | Front Ø(mm) | 34.8 | | |
| | Back Ø(mm) | 36.0 | | |
| Mount | | V58 | | |
| Weight (kg) | | 0.5 | | |
| Size (mm) | | Ø68×60 | | |
| Filter Thread (mm) | | M58×0.75-6H | | |
| Working Temperature | | -20°C～+60°C | | |

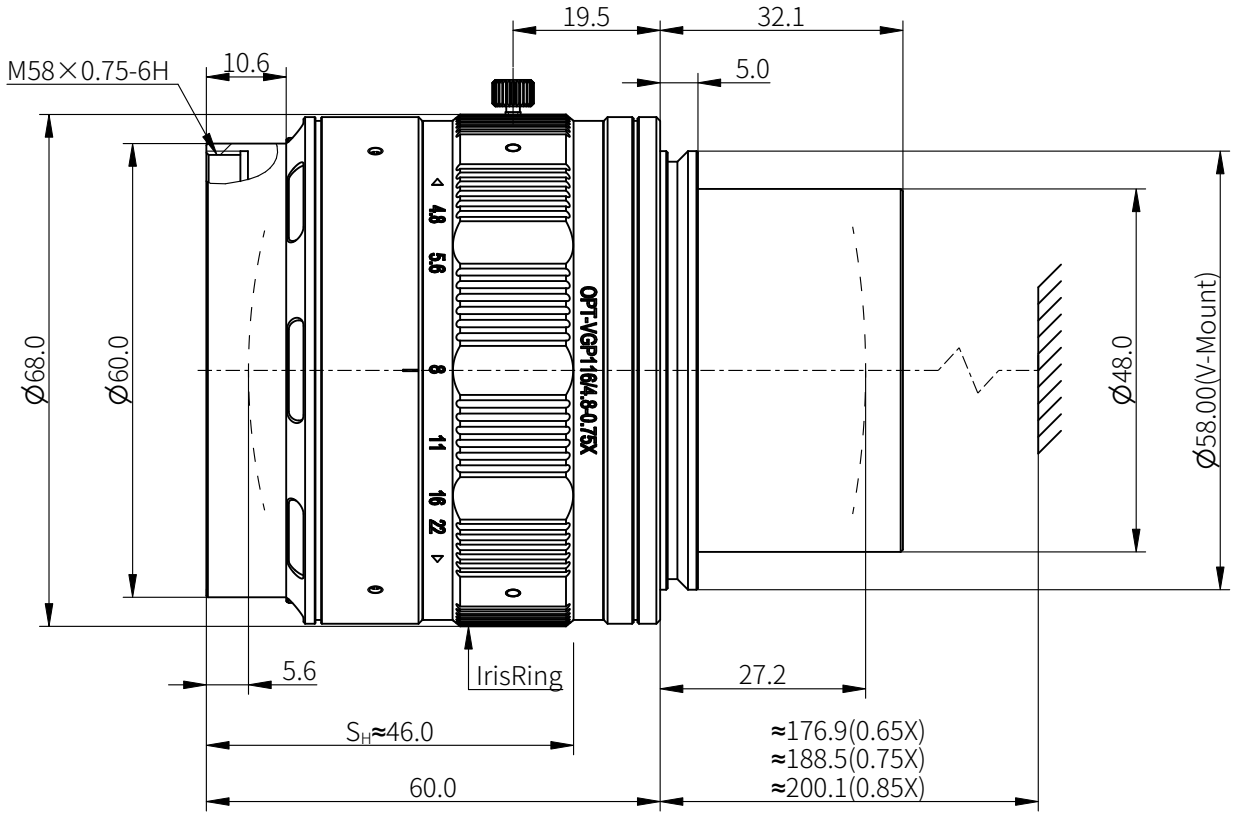


| | | | | | |
|---|---|---|---|---|---|
| View Angle | | Item | Signature | Date | OPT Machine Vision Tech Co., Ltd. |
| | | Drawing | | | |
| Standard Difference | IT14 | Design | | | All Rights Reserved |
| | | Check | | | |
| Drawing Code | | Scale | 1:1 | Name | OPT-VGP116/4.8-0.75X |
| | | Paper Size | A4 | Unit | mm / Page 1 / 1 / Version V1.0 |