Optical Specification		
Model		OPT-C5025-5M-V1.1
Resolution		3.45μm
Mount		C Mount
Sensor		2/3"
Focal Length		50
Adjustion Type		Manual
F NO.		F2.5-F22
Working Distance		600~∞
Field Angle	1/3" (H×V×D)	5.3° ×3.9° ×6.6°
	1/2.5" (H×V×D)	6.2° ×4.6° ×7.7°
	1/1.8" (H×V×D)	7.9° ×5.9° ×9.8°
	2/3" (H×V×D)	9.1° ×7.7° ×12.0°
Distortion		< 0.05%
Weight		0.11kg
Back Focal Length		13.19
Size		Ø37.00×51.60
Filter		M30.5×P0.5
Working Temperature		-20°C~+60°C

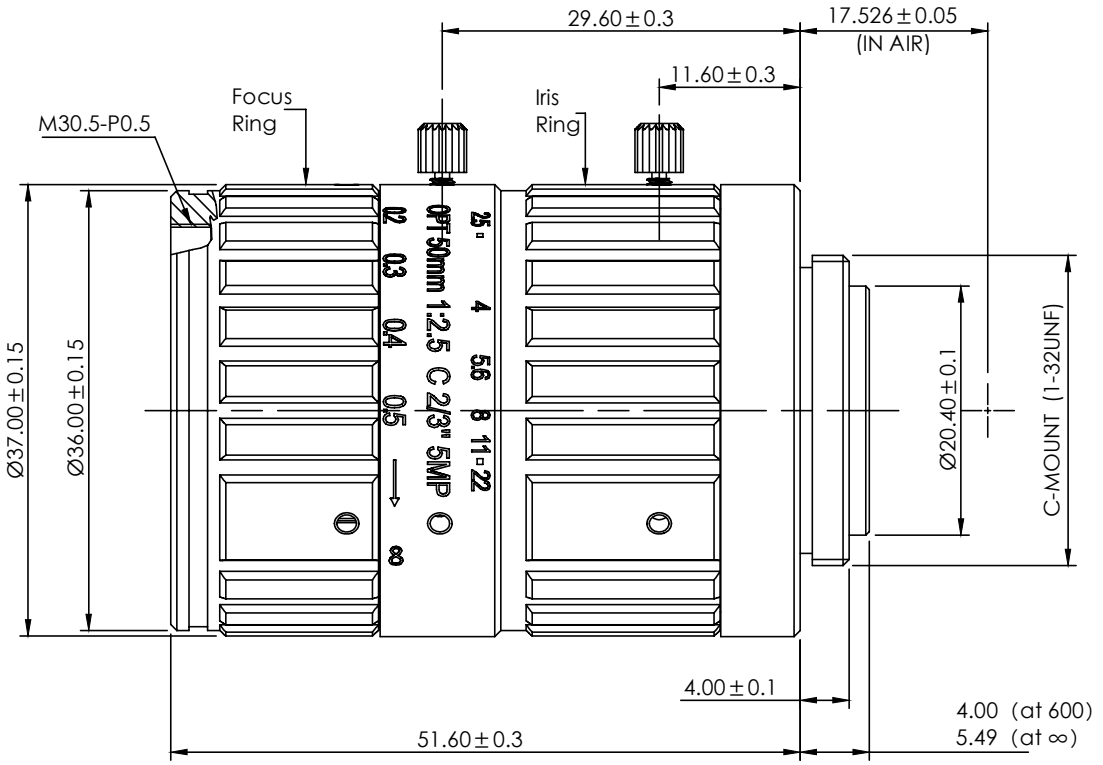

Copyright © 2020 by OPT
All Rights Reserved

View Angle	Remark	Item	Signature	Date	OPT Machine Vision Co.,Ltd.
		Drawing			
Standard Difference		Design			OPT-C5025-5M-V1.1
		Check			
		Approve			
IT14		Paper Size	A4		
Drawing Code		Revised Date	2020-04-28		Scale / Page 1/1 Total Page / Version A01