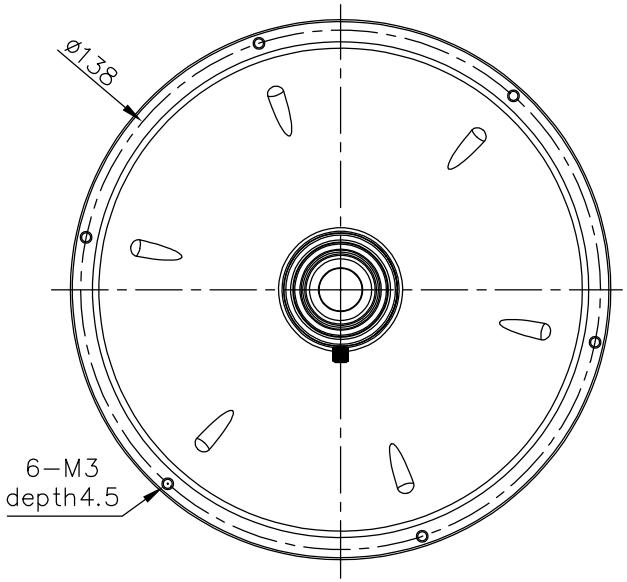

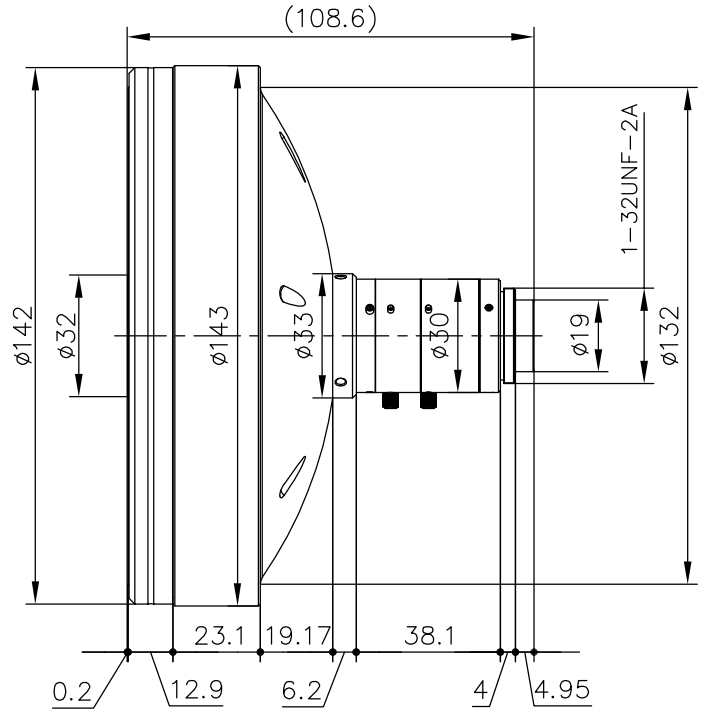

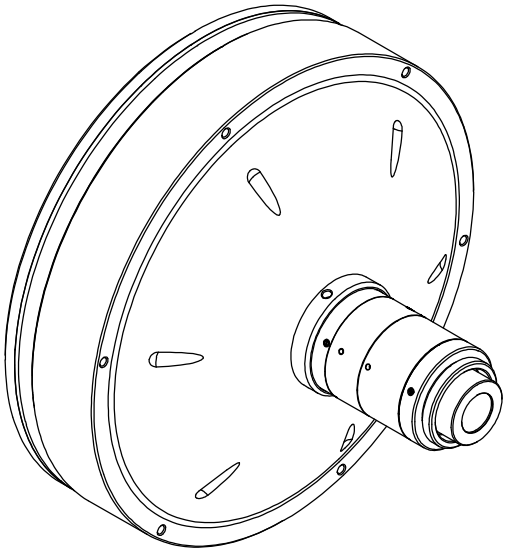

View Angle		Remark	Item	Signature	Date	OPT Machine Vision Co.,Ltd.
			Drawing			
Standard Difference			Design			OPT-CDF01
			Check			
			Approve			
			Paper Size	A4		
Drawing Code			Revised Date	2019.05.14	Scale	Page 1/1 Total Page Version V1.0

Copyright © 2011 by OPT
All Rights Reserved