Optical Specification	
Model	OPT-COB2528B-V2.0
Focal Length(mm)	25
Sensor	2/3"
Resolution	2.2μm
Adjustion Type	Manual
Aperture	F2.8-F16
Working Distance(mm)	150~∞
Mag. at MOD	0.159X at WD150
TV Distortion	<0.15% at WD300
Back Facal Length (mm)	16.63 at WD150
	12.65 at Infinity
Chief Ray Angle	< 5°
Mount	C Mount
Filter	M27×P0.5
Size	Ø29.00×34.00
Weight	50g
Working Temperature	-20°C~60°C

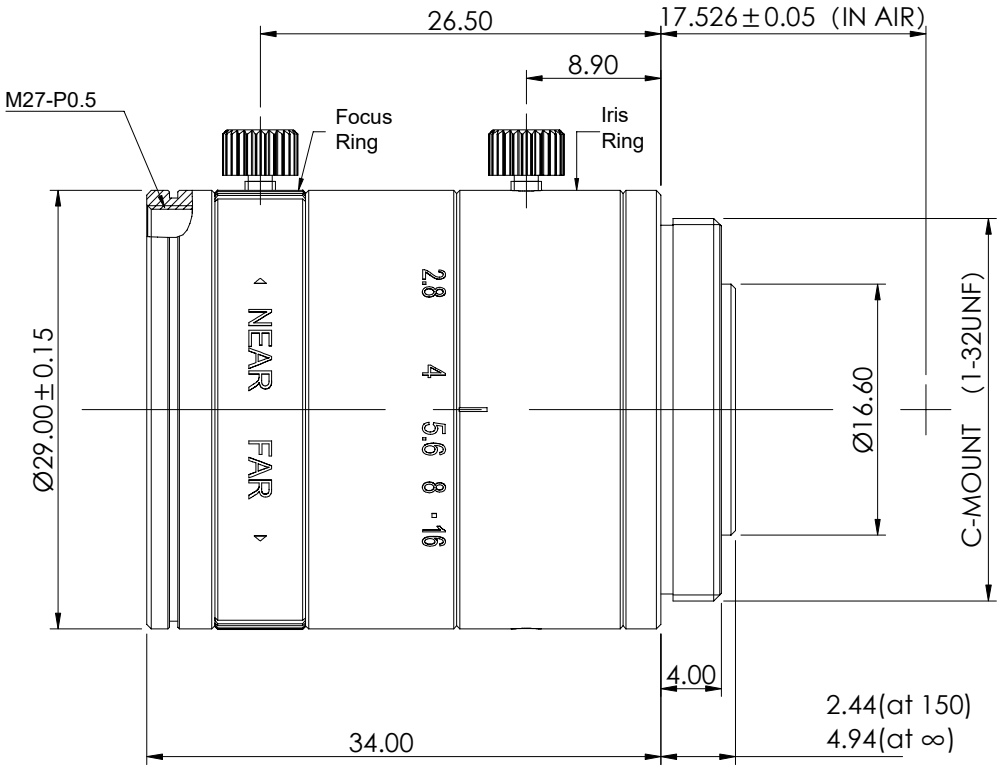

View Angle	Remark	Item	Signature	Date	OPT Machine Vision Co.,Ltd.
		Drawing			
Standard Difference		Design			OPT-COB2528B-V2.0
		Check			
		Approve			
IT14		Paper Size	A4		
		Revised Date	2020-5-23		Scale / Page 1/1 Total Page / Version A02

Copyright © 2020 by OPT
All Rights Reserved

Drawing Code