Optical Specification

Model		OPT-C3514-SWIR
Focal Length (mm)		35
Adjustion Type		Manual
Aperture		F1.4～F16
Sensor ∅ (mm)		16(1")
Working Distance (mm)		500～∞
Mag. at MOD		0.071X at WD500
Resolution (μm)		5
Distortion		<0.547% at ∞
Back Focal Length (mm)		16.057 at WD500
		13.658 at ∞
Working Wavelength(nm)		900-1700
Field Angle	1"(16× 12.8× 9.6)	25.2°×20.3°×15.2°
Mount		C-Mount
Weight (kg)		0.16
Size (mm)		∅45× 43.3
Working Temperature		-20°C～+50°C

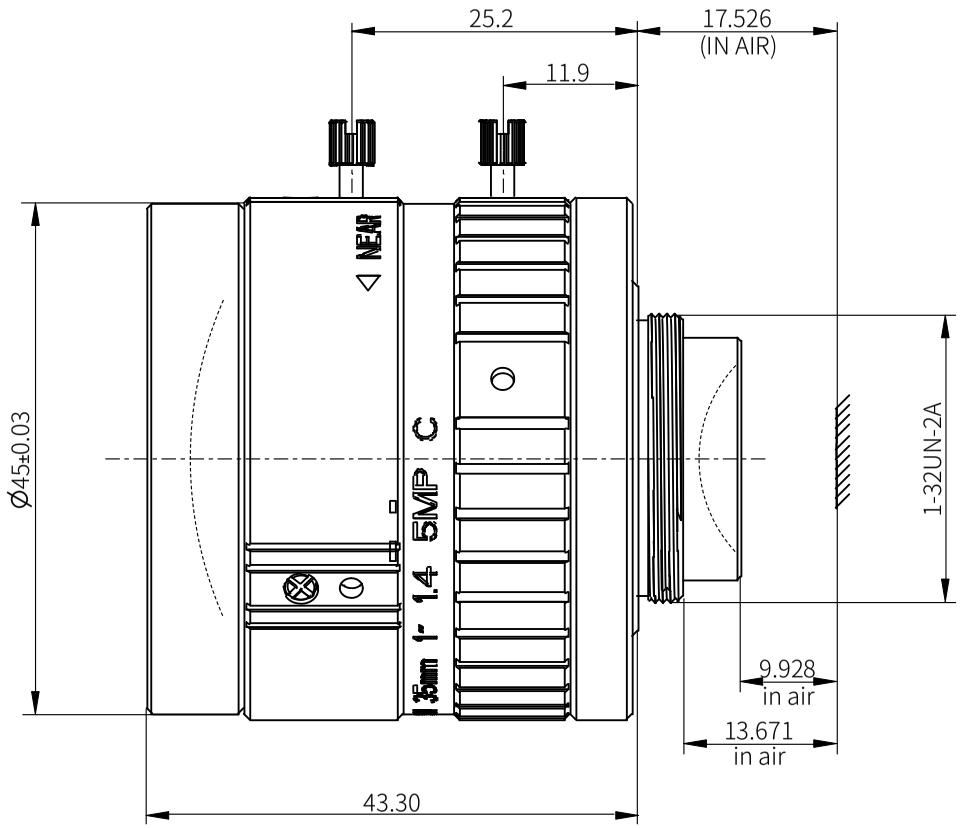

View Angle		Item	Signature	Date	OPT Machine Vision	OPT Machine Vision Tech Co., Ltd.		
		Drawing						
Standard Difference	IT14	Design			All Rights Reserved			
		Check						
Drawing Code		Scale	1:1		Name	OPT-C3514-SWIR		
		Paper Size	A4		Unit	mm	Page 1 / 1	Version V1.0

All Rights Reserved